Owner's Manual

QUANTUM® 1107

QUANTUM® REHAB

INNOVATIVE REHAB SOLUTIONS

A Division of Pride Mobility Products® Corp.

21 Healey Road • Dandenong,3175 • Victoria, Australia • ACN# 088 609 661 • www.quantumrehab.com

SAFETY GUIDELINES

The symbols below are used throughout this owner's manual and on the power chair to identify warnings and important information. It is very important for you to read them and understand them completely.

WARNING! Failure to follow designated procedures can cause either personal injury, component damage or malfunction (black symbol on yellow triangle with black border).

MANDATORY! These actions should be performed as specified. Failure to perform mandatory actions can cause injury to personnel and/or damage to equipment (white symbol on blue dot).

PROHIBITED! These actions should be prohibited. These actions should not be performed at any time or in any circumstances. Performing a prohibited action can cause injury to personnel and/ or damage to equipment (black symbol with red circle and red slash).

ACN **088 609 661**

This product is manufactured by:
Pride Mobility Products Corporation
182 Susquehanna Avenue
Exeter, PA 18643
USA

INFMANU2992/Rev A/June05

CONTENTS

This owner's manual is compiled from the latest specifications and product information available at the time of publication. We reserve the right to make changes as they become necessary. Any changes to our products may cause slight variations between the illustrations and explanations in this manual and the product you have purchased.

I. INTRODUCTION

SAFETY

WELCOME to Quantum Rehab, a division of Pride Mobility Products Corporation (Pride). The power chair you have purchased combines state-of-the-art components with **safety**, comfort, and styling in mind. We are confident that these design features will provide you with the conveniences you expect during your daily activities. Once you understand how to **safely** operate and care for your power chair, it should give you years of trouble free operation and service.

Read and **follow** all instructions, warnings, and notes in this manual before attempting to operate your power chair for the first time. In addition, your **safety** depends upon you, as well as your provider, carer or healthcare professional in using good judgement.

If there is any information in this manual which you do not understand or if you require additional assistance for setup or operation, please contact your Quantum Rehab Specialist. **Failure to follow the instructions in this manual and those located on your power chair can lead to personal injury and/or damage to the power chair, including voiding the warranty.**

PURCHASER'S AGREEMENT

By accepting delivery of this product, you promise that you will not change, alter, or modify this product or remove or render inoperable or unsafe any guards, shields, or other safety features of this product; fail, refuse, or neglect to install any retrofits kits from time to time provided by Pride to enhance or preserve the safe use of this product.

INFORMATION EXCHANGE

We want to hear your questions, comments, and suggestions about this manual. We would also like to hear about the safety and reliability of your new power chair and about the service you received from your Quantum Rehab Specialist.

Please notify us of any change of address, so we can keep you apprised of important information about safety, new products, and new options that can increase your ability to use and enjoy your power chair. Please feel free to contact us at the address below:

Pride Mobility Products Australia Pty. Ltd.
21 Healey Road
Dandenong, 3175
Victoria, Australia

My Quantum Rehab Specialist:

Name:_____

Address:_____

Phone Number:_____

Purchase Date:_____

NOTE: If you ever lose or misplace your product registration card or your copy of this manual, contact us and we will be glad to send you a new one immediately.

II. SAFETY

PRODUCT SAFETY SYMBOLS

The symbols below are used on the power chair to identify warnings, mandatory actions, and prohibited actions. It is very important for you to read and understand them completely.

Corrosive chemicals contained in battery. Use only AGM or Gel-Cell batteries to reduce the risk of leakage or explosive conditions.

EMI-RFI - This product has been tested and passed at an immunity level of 20 V/m.

Read and follow the information in the owner's manual.

Maximum seating weight.

Locked and in drive mode.

Place unit on level ground and stand behind or to one side when changing from drive mode to freewheel mode or freewheel mode to drive mode.

Unlocked and in freewheel mode.

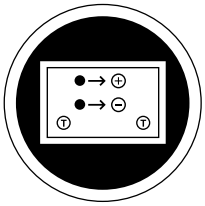

Battery Configuration:
T = Terminal Post
Connect Red wire to T with +
Connect Black wire to T with –

II. SAFETY

Do not remove anti-tip wheels.

Do not use a cell phone, walkie/talkie, laptop, or other radio transmitter while operating.

Avoid exposure to rain, snow, ice, salt, or standing water whenever possible. Maintain and store in a clean and dry condition.

Removal of grounding prong can create electrical hazard. If necessary, properly install an approved 3-pronged adapter to an electrical outlet having 2-pronged plug access. Failure to heed could result in personal injury and/or property damage.

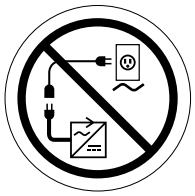

Prevent personal injury and equipment damage. Do not connect an extension lead to the AC/DC converter or the battery charger.

II. SAFETY

SAFETY

MANDATORY! Do not operate your new power chair for the first time without completely reading and understanding this owner's manual.

Your power chair is a state-of-the-art life-enhancement device designed to increase mobility. Pride provides an extensive variety of products to best fit the individual needs of the power chair user. Please be aware that the final selection and purchasing decision regarding the type of power chair to be used is the responsibility of the power chair user, who is capable of making such a decision, and his/her healthcare professional (i.e., medical doctor, physical therapist, etc.).

The contents of this manual are based on the expectation that a mobility device expert has properly fitted the power chair to the user and has assisted the prescribing healthcare professional and/or the Quantum Rehab Specialist in the instruction process for the use of the product.

There are certain situations, including some medical conditions, where the power chair user will need to practice operating the power chair in the presence of a trained attendant. A trained attendant can be defined as a family member or care professional specially trained in assisting a power chair user in various daily living activities.

As you begin using your power chair during daily activities, you will probably encounter situations in which you will need some practice. Simply take your time and you will soon be in full and confident control as you maneuver through doorways, on and off of lifts, up and down ramps, and over moderate terrain.

Below are some precautions, tips, and other safety considerations that will help the user become accustomed to operating the power chair safely.

Modifications

Pride has designed and engineered your power chair to provide maximum mobility and utility. A wide range of accessories is available from your Quantum Rehab Specialist to further customise your power chair to better suit your needs and/or preferences. However, under no circumstances should you modify, add, remove, or disable any feature, part, or function of your power chair.

WARNING! Do not modify your power chair in any way not authorised by Pride. Unauthorised modifications may result in personal injury and/or damage to your power chair.

Pre-Ride Safety Check

Get to know the feel of your power chair and its capabilities. Pride recommends that you perform a safety check before each use to make sure your power chair operates smoothly and safely.

Perform the following inspections prior to using your power chair:

- Check for proper tyre inflation. Maintain but do not exceed **2.4 bar (35 psi)** in each tyre if equipped with pneumatic tyres.
- Check all electrical connections. Make sure they are tight and not corroded.
- Check all controller connections to the power base. Make sure they are secured properly.
- Check the brakes. See VIII. "Care and Maintenance."
- Check battery charge. See VI. "Batteries and Charging."

NOTE: If you discover a problem, contact your Quantum Rehab Specialist for assistance.

II. SAFETY

Weight Limitations

Your power chair is rated for a maximum weight capacity. Please refer to the specifications table for this limit.

WARNING! Exceeding the weight capacity voids your warranty and may result in personal injury and/or damage to your power chair. Pride will not be held responsible for injuries and/or property damage resulting from failure to observe weight limitations.

WARNING! Do not carry passengers on your power chair. Carrying passengers on your power chair may result in personal injury and/or property damage.

Tyre Inflation

If your power chair is equipped with pneumatic tyres, you should check or have the air pressure checked regularly. Proper inflation pressures will prolong the life of your tyres and help ensure the smooth operation of your power chair.

WARNING! It is important that 2.4 bar (35 psi) tyre pressure be maintained in pneumatic tyres at all times. Do not underinflate or overinflate your tyres. Low pressure may result in loss of control and overinflated tyres may burst. Failure to maintain 2.4 bar (35 psi) tyre pressure in pneumatic tyres at all times may result in tyre and/or wheel failure, causing serious personal injury and/or damage to your power chair.

WARNING! Inflate your power chair drive tyres from a regulated air source with an available pressure gauge. Inflating your tyres from an unregulated air source could overinflate them, resulting in a burst tyre and/or personal injury.

Incline Information

More and more buildings have ramps with specified degrees of inclination, designed for easy and safe access. Some ramps may have turning switchbacks (180-degree turns) that require you to have good cornering skills on your power chair.

- Proceed with extreme caution as you approach the downgrade of a ramp or other incline.
- Take wide swings with your power chair's front wheels around any tight corners. If you do that, the power chair's rear wheels will follow a wide arc, not cut the corner short and not bump into or get hung up on any railing corners.
- When driving down a ramp, keep the power chair's speed adjustment set to the slowest speed setting to ensure a safely controlled descent. See VII. "Operation."
- Avoid sudden stops and starts.

When climbing an incline, try to keep your power chair moving. If you must stop, start up again slowly and then accelerate cautiously. When driving down an incline, set your power chair to the slowest speed setting and drive in the forward direction only. If your power chair starts to move down the incline faster than you anticipated or desired, allow it to come to a complete stop by releasing the joystick, then push the joystick forward slightly to ensure a safely controlled descent.

WARNING! When climbing an incline, do not zigzag or drive at an angle up the face of the incline. Drive your power chair straight up the incline. This greatly reduces the possibility of a tip or a fall. Always exercise extreme caution when negotiating an incline.

WARNING! You should not travel up or down a potentially hazardous incline (i.e., areas covered with snow, ice, cut grass or wet leaves).

WARNING! When on any sort of an incline or decline, never place the power chair in freewheel mode while seated on it or standing next to it. Doing so may result in personal injury and/or damage to your power chair.

WARNING! Never travel down an incline rearward. This may result in personal injury.

WARNING! Even though your power chair is capable of climbing slopes greater than those illustrated in figure 1, do not, under any circumstances, exceed the incline guidelines or any other specifications presented in this manual. Doing so could cause instability in your power chair, resulting in personal injury and/or damage to your power chair.

Most handicap public access ramps are required to have a maximum slope of 8.7% (5°). Therefore, Pride recommends that the maximum slope of an incline you attempt to safely ascend or descend on your power chair does not exceed 8.7% (5°). See figure 1.

WARNING! Any attempt to climb or descend a slope steeper than 8.7% (5°) may put your power chair in an unstable position and cause it to tip, resulting in personal injury.

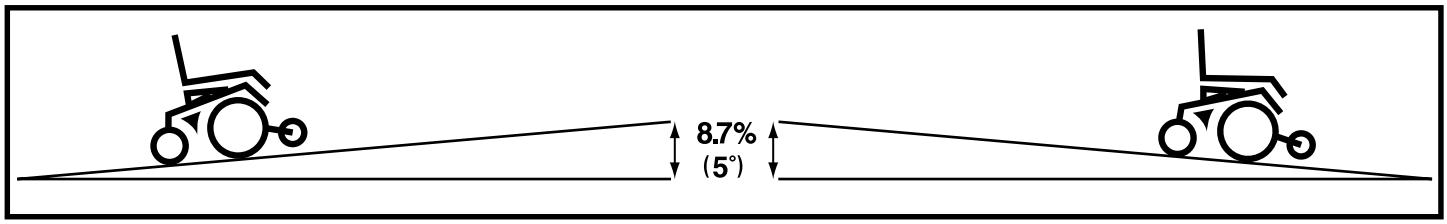

Figure 1. Maximum Safe Slope (Ascending and Descending)

Braking Information

Your power chair is equipped with two powerful brake systems:

- Regenerative — uses electricity to rapidly slow the vehicle when the joystick returns to the centre/stop position.
- Disc Park Brake — activates mechanically after regenerative braking slows the vehicle to near stop or when power is removed from the system for any reason.

Cornering Information

While your power chair is equipped with caster wheels and anti-tip wheels, excessively high cornering speeds can still create the possibility of tipping. Factors which affect the possibility of tipping include, but are not limited to: cornering speed, steering angle (how sharply you are turning), uneven road surfaces, inclined road surfaces, riding from an area of low traction to an area of high traction (such as passing from a grassy area to a paved area – especially at high speed while turning), and abrupt directional changes. High cornering speeds are not recommended. If you feel that you may tip over in a corner, reduce your speed and steering angle (i.e., lessen the sharpness of the turn) to prevent your power chair from tipping.

WARNING! When cornering sharply, reduce your speed. This greatly reduces the possibility of a tip or fall. To avoid personal injury and/or property damage, always exercise common sense when cornering.

Outdoor Driving Surfaces

Your power chair is designed to provide optimum stability under normal driving conditions—dry, level surfaces composed of concrete, blacktop, or tarmac. However, Pride recognises that there will be times when you will encounter other surface types. For this reason, your power chair is designed to perform admirably on packed soil, grass, and gravel. Feel free to use your power chair safely on lawns and in park areas.

- Reduce your power chair's speed when driving on uneven terrain and/or soft surfaces.
- Avoid tall grass that can entangle the running gear.
- Avoid loosely packed gravel and sand.
- If you feel unsure about a driving surface, avoid that surface.

Freewheel Mode

Your power chair is equipped with a manual freewheel system to allow for manual maneuverability by a trained attendant. For more information about how to place your power chair into and out of freewheel mode, see III. "Your Power Chair."

WARNING! Do not use your power chair in freewheel mode without an attendant present. Personal injury may result.

WARNING! Do not attempt to personally place your power chair in freewheel mode while seated on it. Personal injury may result. Ask an attendant for assistance if necessary.

WARNING! Do not place your power chair in freewheel mode while on an incline. The chair could roll uncontrollably on its own, causing personal injury.

Stationary Obstacles (Steps, Kerbs, etc.)

Proceed with extreme caution when driving near raised surfaces, unprotected ledges, and/or drop-offs (kerbs, porches, stairs, etc.). The correct method for approaching a kerb is illustrated in figure 2.

WARNING! Do not attempt to have your power chair climb or descend an obstacle that is higher than 5 cm unless you have the assistance of an attendant.

WARNING! Do not attempt to have your power chair proceed rearward down any step, kerb, or other obstacle. This may cause the power chair to tip and cause personal injury.

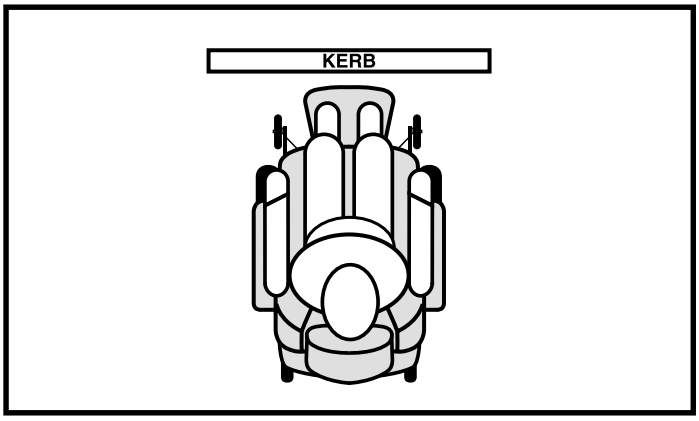

Figure 2. Correct Kerb Approach

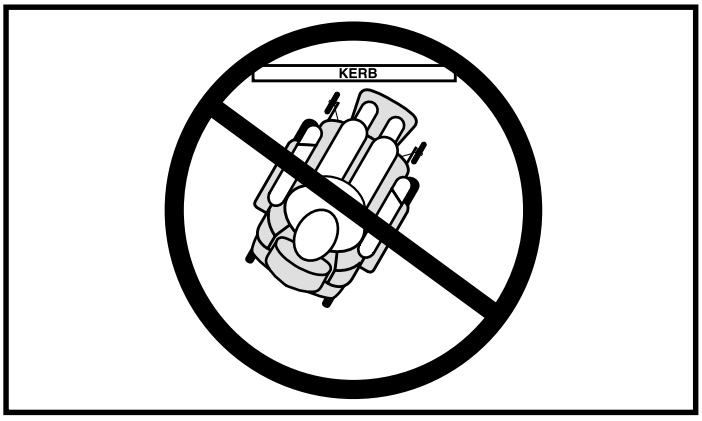

Figure 3. Incorrect Kerb Approach

Public Streets and Roadways

WARNING! Exercise extreme caution when operating your power chair on footpaths, pavements, bridleways, pedestrian areas and roads. Obey the Code of Practice for Class 3 vehicle users. Failure to heed could result in serious injury and/or damage to your power chair.

NOTE: A copy of the Department of Transportation, Code of Practice for Class 3 vehicle users, may be obtained by contacting your Quantum Rehab Specialist.

Stairs and Escalators

Power chairs are not designed to travel up or down stairs or escalators. Always use a lift.

WARNING! Never use your power chair to negotiate steps or escalators. You may cause injury to yourself and to others and/or damage your power chair.

Doors

- Determine if the door opens toward or away from you.
- Drive your power chair gently and slowly forward to push the door open. Or, drive your power chair gently and slowly rearward to pull the door open.

Lifts

Modern lifts have a door edge safety mechanism that, when pushed, reopens the lift door(s).

- If you are in the doorway of a lift when the door(s) begin to close, push on the rubber door edge or allow the rubber door edge to contact the power chair and the door will reopen.
- Use care that handbags, packages, or power chair accessories do not become caught in lift doors.

Lift/Elevation Products

If you will be traveling with your power chair, you may find it necessary to use a lift/elevation product to aid in transportation. Pride recommends that you closely review the instructions, specifications, and safety information set forth by the manufacturer of the lift/elevation product before using that product.

Motor Vehicle Transport

Currently, there are no standards approved for tie-down systems in a moving vehicle of any type to transport a person while seated in a power chair.

WARNING! Do not sit on your power chair while it is in a moving vehicle. Personal injury and/or property damage may result.

WARNING! Always be sure your power chair and its batteries are properly secured when it is being transported. Failure to do so may result in personal injury and/or damage to your power chair.

Positioning Belts

Your Quantum Rehab Specialist, therapist(s), and other healthcare professionals are responsible for determining your requirement for a positioning belt in order to operate your power chair safely.

WARNING! If you require a positioning belt to safely operate your power chair, make sure it is fastened securely. Serious personal injury may result if you fall from the power chair.

WARNING! The positioning belt is not designed for use as a seat belt in a motor vehicle. Nor is your power chair suitable for use as a seat in any vehicle. Anyone traveling in a vehicle should be properly belted into seats approved by the vehicle manufacturer.

Preventing Unintended Movement

WARNING! If you anticipate being seated in a stationary position for an extended period of time, turn off the power. This will prevent unexpected motion from inadvertent joystick contact. This will also eliminate the possibility of unintended chair movement from electromagnetic (EM) sources. Failure to do so may result in personal injury.

Removable Parts

WARNING! Do not attempt to lift or move a power chair by any of its removable parts. Personal injury and/or damage to the power chair may result.

Transfers

Transferring onto and off of your power chair requires a good sense of balance. Always have an attendant or healthcare professional present while learning to properly transfer yourself.

To eliminate the possibility of injury, Pride recommends that you or a trained attendant perform the following tasks before attempting a transfer:

- Turn off the power to the controller. See VII. "Operation."
- Ensure your power chair is not in freewheel mode. See III. "Your Power Chair."
- Turn both caster wheels toward the transfer destination to improve power chair stability during transfer.
- Make sure both armrests are flipped up or removed from your power chair.
- Flip up the foot platform or move the leg rests aside; this will help to keep your feet from getting caught on the foot rigging during the transfer.
- Reduce the distance between your power chair and the object you are transferring onto.

Figure 4. Ideal Transfer Position

WARNING! Before transferring, position yourself as far back as possible in the power chair seat to prevent the power chair from tipping forward during transfer and causing injury.

WARNING! Avoid using your armrests for weight bearing purposes. Such use may cause the power chair to tip and cause personal injury.

WARNING! Avoid putting all of your weight on the foot riggings. Such use may cause the power chair to tip and cause personal injury.

Inclement Weather Precautions

Exposure of your power chair to inclement weather conditions should be avoided whenever possible. If suddenly caught up in rain, snow, severe cold or heat while operating your power chair, proceed to shelter at the earliest opportunity. Thoroughly dry your power chair before storing, charging, or operating your power chair.

WARNING! Operating in rain, snow, salt, mist/spray conditions and on icy/slippery surfaces can cause personal injury and/or damage to the power chair and electrical system. Maintain and store your power chair in a dry and clean condition.

Reaching and Bending

Never reach, lean, or bend while driving your power chair. If it is absolutely necessary to reach, lean, or bend while seated on your power chair, it is important to maintain a stable centre of gravity and keep the power chair from tipping. Pride recommends that the power chair user determine his/her personal limitations and practice bending and reaching in the presence of a qualified healthcare professional.

WARNING! Do not bend, lean, or reach for objects if you have to pick them up from the floor by reaching down between your knees. Movements such as these may change your centre of gravity and the weight distribution of the power chair. This may cause your power chair to tip, possibly resulting in personal injury. Keep your hands away from the tyres when driving.

Batteries

In addition to following the warnings below, be sure to comply with all other battery handling information. For more information about your power chair's batteries, see VI. "Batteries and Charging."

WARNING! Power chair batteries are heavy. See specifications table. If you are unable to lift that much weight, be sure to get help. Lifting beyond your capacity can result in personal injury.

WARNING! Battery posts, terminals, and related accessories contain lead and lead compounds. Wash hands after handling.

WARNING! Always protect the batteries from freezing and never charge a frozen battery. Charging a frozen battery may result in personal injury and/or damage to the battery.

Prescription Drugs/Physical Limitations

Users must exercise care and common sense when operating a power chair. This includes awareness of safety issues when taking prescribed or over-the-counter drugs or when the user has specific physical limitations.

WARNING! Consult your physician if you are taking prescribed or over-the-counter medication or if you have certain physical limitations. Some medications and limitations may impair your ability to operate your power chair in a safe manner.

Alcohol

The power chair user must exercise care and common sense when operating his/her power chair. This includes awareness of safety issues while under the influence of alcohol.

WARNING! Do not operate your power chair while you are under the influence of alcohol, as this may impair your ability to operate your power chair in a safe manner.

Electromagnetic and Radio Frequency Interference (EMI/RFI)

WARNING! Laboratory tests have shown that electromagnetic and radio frequency waves can have an adverse affect on the performance of electrically-powered mobility vehicles.

Electromagnetic and Radio Frequency Interference can come from sources such as cellular phones, mobile two-way radios (such as walkie-talkies), radio stations, TV stations, amateur radio (HAM) transmitters, wireless computer links, microwave signals, paging transmitters, and medium-range mobile transceivers used by emergency vehicles. In some cases, these waves can cause unintended movement or damage to the control system. Every electrically-powered mobility vehicle has an immunity (or resistance) to EMI. The higher the immunity level, the greater the protection against EMI. This product has been tested and has passed at an immunity level of 20 V/m.

PROHIBITED! To prevent unintended movement, turn off the power to the electrically-powered mobility vehicle before using a cell phone, two-way radio, laptop, or any other type of radio transmitter. Avoid coming into close proximity of radio or TV stations.

WARNING! The addition of accessories or components to the electrically-powered mobility vehicle can increase the susceptibility of the vehicle to EMI. Do not modify your power chair in any way not authorised by Pride.

WARNING! The electrically-powered mobility vehicle itself can disturb the performance of other electrical devices located nearby, such as alarm systems.

NOTE: For further information on EMI/RFI, visit the Resource Centre on www.pridemobility.com. If unintended motion or brake release occurs, turn your power chair off as soon as it is safe to do so. Contact your Quantum Rehab Specialist to report the incident.

THE QUANTUM 1107

The power chair has two main assemblies: the seat assembly and the power base assembly. See figure 5. Typically, the seat assembly includes the armrests, seatback, and seat base. The power base assembly includes two motor/brake assemblies, two drive wheels, two anti-tip wheels, two caster wheels, two battery boxes, and wiring harnesses. See figure 5, 6 and 7.

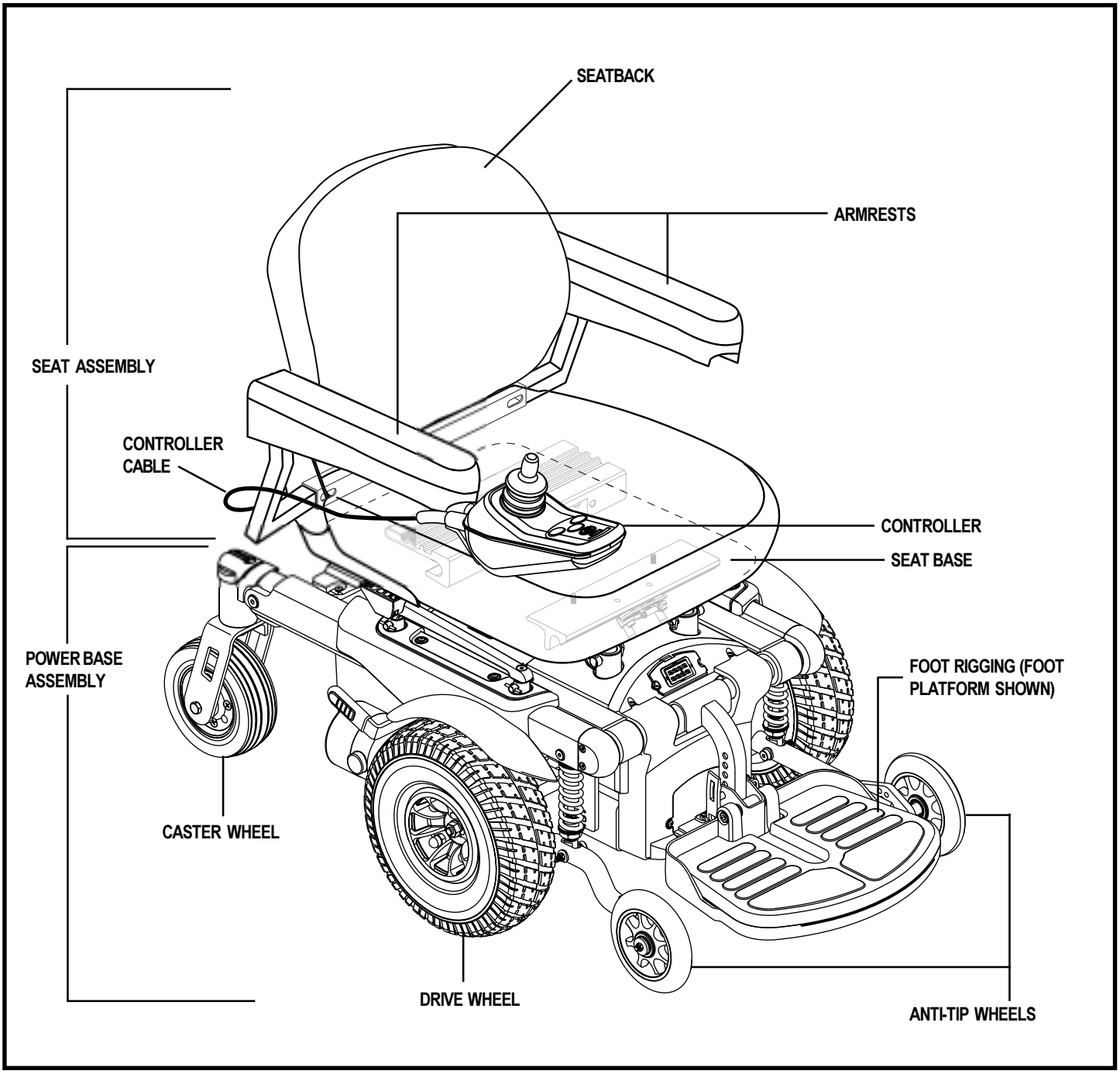

Figure 5. The Quantum 1107

QUANTUM 1107 SPECIFICATIONS	
Class of Use:	B
Suspension:	Active-Trac
Drive Wheels:	25.4 cm pneumatic *(solid tyres are optional)*
Castor Wheels:	15.25 cm solid, rear-mounted
Anti-tip Wheels:	13 cm solid, front-mounted
Maximum Speed:	Up to 8.05 km/h*
Brakes:	"Intelligent Braking" electronic regenerative, disc park brake
Maximum Safe Slope:	8.7% (5°)
Maximum Climbing Ability:	8.7% (5°)
Maximum Obstacle Climbing Ability:	5 cm
Ground Clearance:	6.34 cm
Turning Radius:	52 cm *(without foot riggings)*
Overall Size:	Length: 93 cm *(without foot riggings)* Width: 58.42 cm
Seating Options:	Medium-back Seat Synergy Seating Systems Synergy TRU-Balance Power Positioning Systems Euro Seat
Drivetrain:	Two motor, mid-wheel drive
Batteries:	Two 12-volt, U-1 batteries (AGM or Gel-Cell type recommended)
Range:	Up to 40 km*
Battery Charger:	Off-board
Electronics:	70-amp PG Drives VSI Controller 70-amp PG Drives Remote Plus Controller 75-amp Pride FLIGHT Controller
Weight Capacity:	136 kg 72.5 kg with Synergy manual tilt
Component Weights:	Base: 51 kg Right/Left Sections: 19.5 kg each Centre Section: 8 kg Battery Boxes: 2 kg each Medium-back Seat: 27 kg Batteries: 13 kg each

*Depending on user weight and terrain.

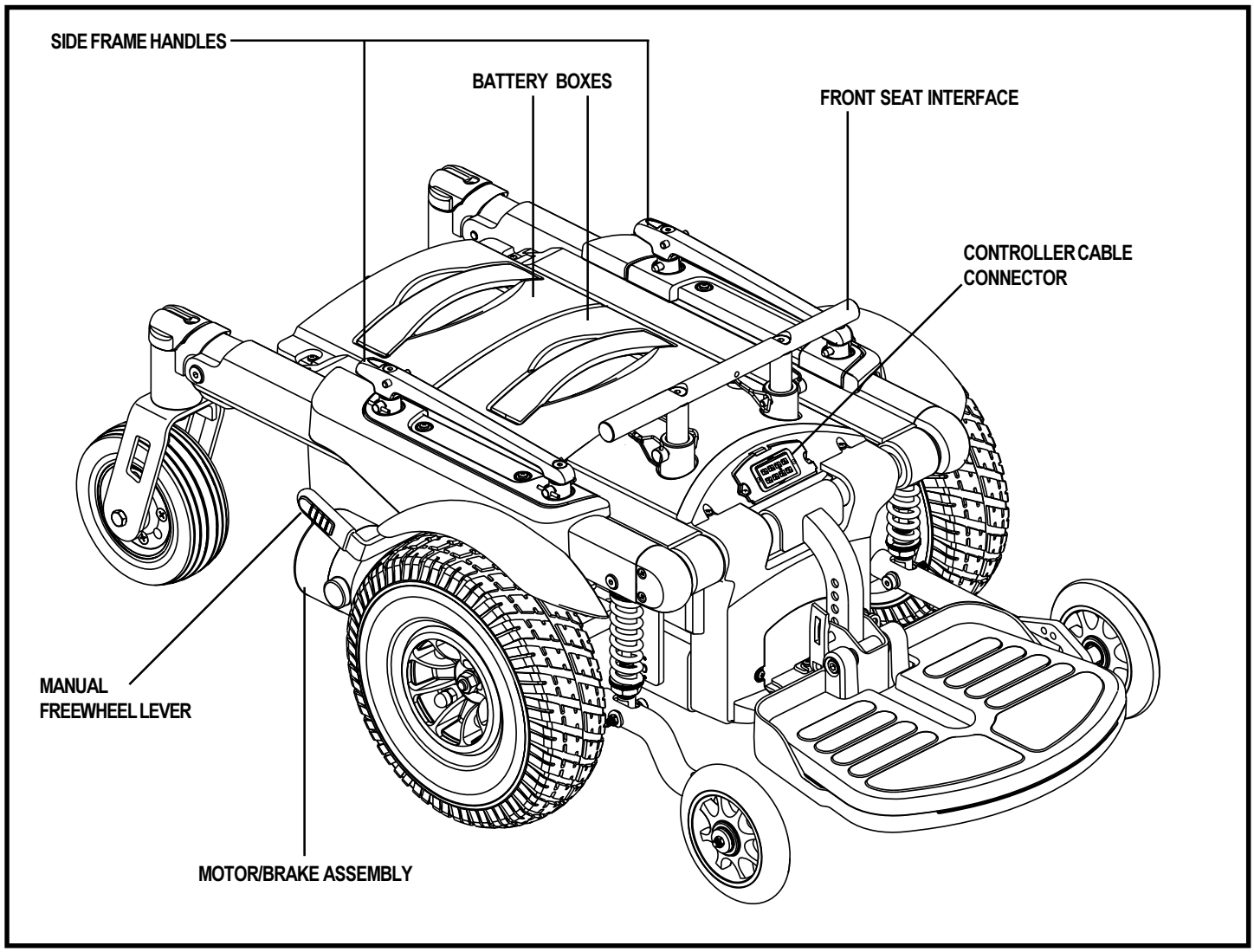

Figure 6. The Quantum 1107 Power Base

Electrical Components

The electrical components consist of the controller assembly, the batteries, and the motors. The batteries, motors, and controller power module (if equipped) are located on the power base assembly. See figures 6 and 7. The controller is located on the seat assembly. Connectivity between the controller and the motors, the batteries, and the battery charger is provided by one or more wiring harnesses.

Controller Cable Connector: The controller cable connector is where the controller plugs into the power base. Each controller uses a different type of harness. If the controller has a power module in the power base, the connector is a small communications-type connector. If the controller is integrated, then the harness has a large 9-pin connector. Regardless of which type of controller is used, the harness must be secured to the seat assembly and not allowed to drag on the floor.

Battery Harness Connector: This is where the controller connects to the battery boxes.

Main Circuit Breaker (located on rear battery box): The main circuit breaker is a safety feature built into your power chair. When the batteries and the motors are heavily strained (e.g., from excessive loads), the main circuit breaker trips to prevent damage to the motors and the electronics. If the circuit trips, allow your power chair to "rest" for approximately one minute. Next, push in the circuit breaker button, turn on the controller, and continue normal operation. If the main circuit breaker continues to trip repeatedly, contact your Quantum Rehab Specialist.

Controller Power Module: The controller power module enables the controller to communicate with the batteries and the motors.

Motor Connectors: This is where the motors connect to the controller power module.

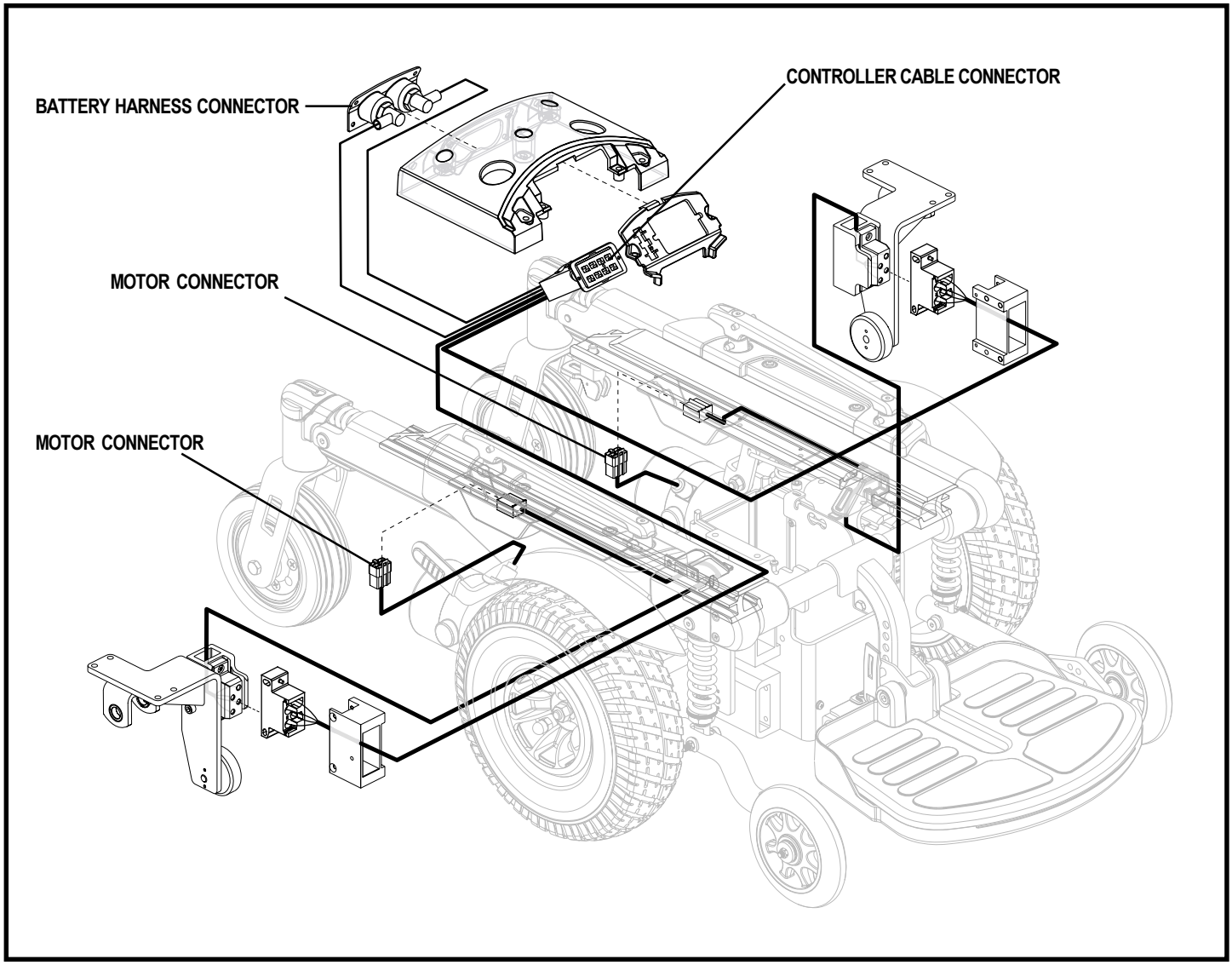

Figure 7. Quantum 1107 Electrical Components

Manual Freewheel Levers

The Quantum 1107 has a manual freewheel lever on each motor. See figure 6. Manual freewheel levers enable you to disengage the drive motors from the gearboxes and maneuver the chair manually.

WARNING! Do not use the power chair while the drive motors are disengaged! Do not disengage the drive motors when the power chair is on an incline, as the unit could roll on its own, causing injury!

To engage or disengage the drive motors:

1. Locate the lever on top of each motor.
2. Pull the two levers upward to engage the drive motors. See figure 8.
3. Push the two levers downward to disengage the drive motors. See figure 9.

If a lever is difficult to move in either direction, slightly rock the power chair back and forth. The lever should then move to the desired position.

WARNING! It is important to remember that when your power chair is in freewheel mode, the braking system is disengaged.

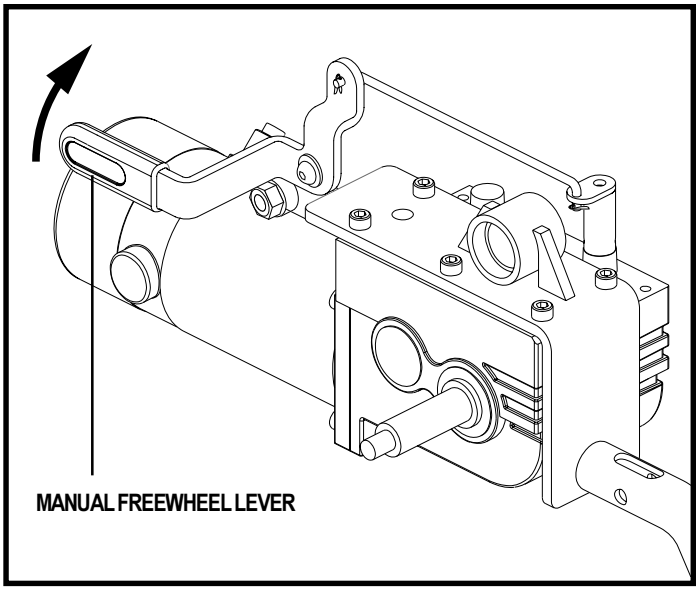

Figure 8. Drive Mode (Drive Engaged)

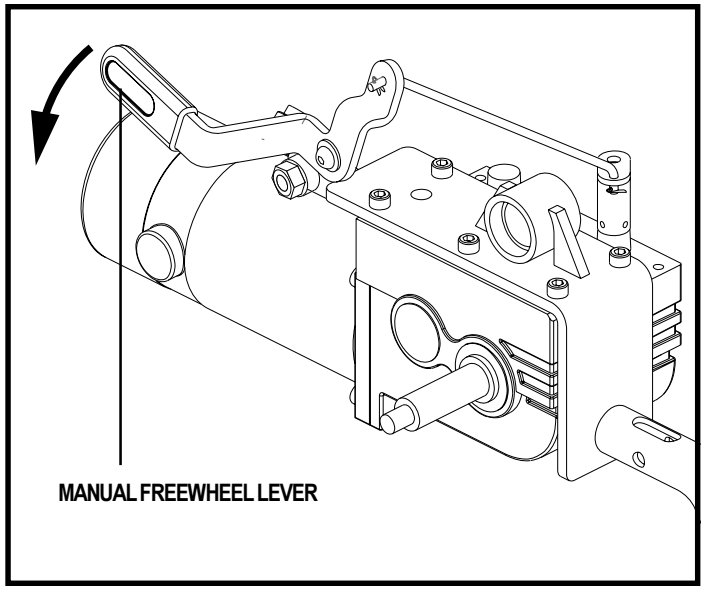

Figure 9. Freewheel Mode (Drive Disengaged)

INITIAL ASSEMBLY

Your power chair may require some assembly either before initial use or after transportation. It may also require disassembly to make some comfort adjustments. Figure 10 details those parts of the power chair that are designed to be disassembled and assembled by an end user or by a qualified carer before using the product or making comfort adjustments.

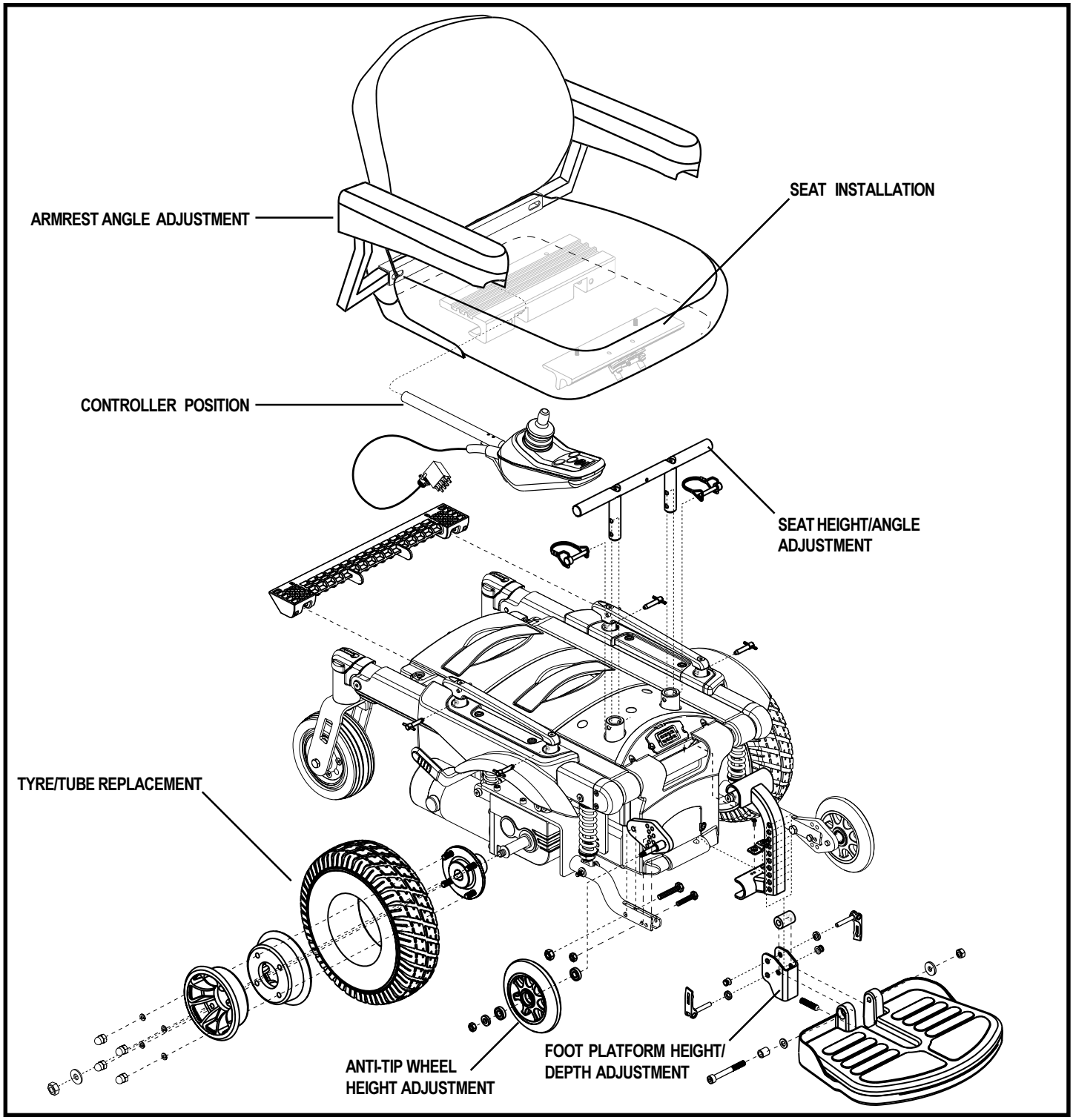

Figure 10. Quantum 1107 Assembly View

Seat Installation

Your power chair uses a seat interface system to attach the seat assembly to the power base assembly. This enables you to install and remove the seat quickly and easily. The main components are a pair of aluminum extrusions mounted to the underside of the seat base and a front and rear seat interface mounted on the power base. See figures 11 and 12.

WARNING! Avoid injury! Do not pick up the seat assembly by the armrests. They are free to pivot and you may lose control of the seat if they do so, resulting in personal injury or damage to the chair.

To install the seat (initial installation):

1. Prior to initial installation, the rear seat interface needs to be installed to the seat base.
2. Slide the rear seat interface into the rear extrusion. See figure 11.
3. Squeeze the retaining pin and clip it onto the rear seat interface.
4. Slide the seat onto the side frame handles and slowly lower the seat onto the front seat interface until it locks into place. See figure 12.
5. Flip the seat latch safety down. See figure 13.

WARNING! Make sure the seat latch safety is flipped down before using your power chair.

6. Install the controller into one of the armrests. See figure 10.
7. Tighten the setscrew on the armrest. See figure 23.
8. Route the controller cable so that it cannot be pinched in the seat hinge.
9. Secure the controller cable to the armrest receiver with one or more wire ties.

To remove the seat:

1. Flip up the seat latch safety. See figure 13.
2. Squeeze the seat latch together.
3. Pull the front of the seat up.
4. Slide the seat forward and off of the power base.

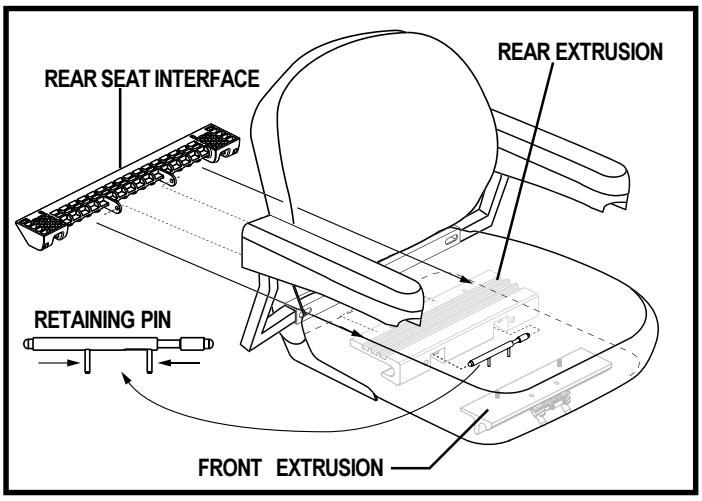

Figure 11. Rear Seat Interface Installation

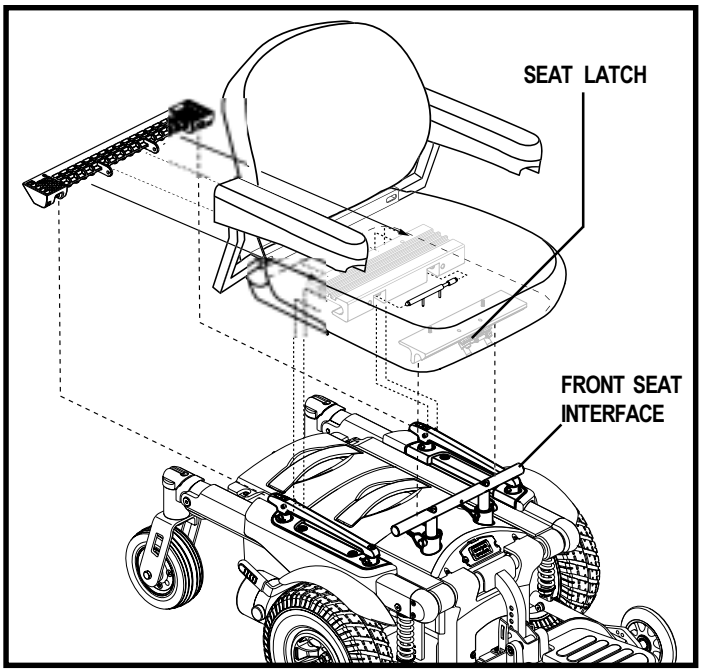

Figure 12. Seat Installation

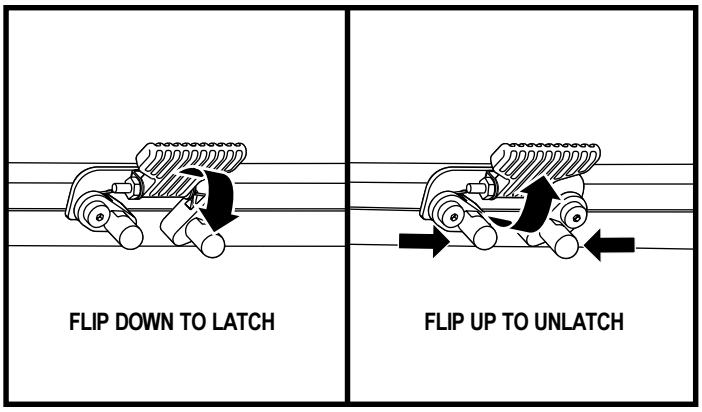

Figure 13. Seat Latch Safety

Power Base Disassembly

The Quantum 1107 power base disassembles into six parts for easy transportation and storage. See figure 13.

To disassemble the Quantum 1107:

1. Turn off power to the controller.
2. Disconnect the controller. See figure 6.
3. Remove the seat.
4. Press the foot platform release button and lift off the foot platform. See figure 14.
5. Flip down the battery box latches on each side of the power base. See figure 15.
6. Slide the battery boxes back and off of the power base.
7. Flip up the centre section latch. See figure 15.
8. Rotate the centre section forward.
9. Grab a side section by the side frame handle.
10. Lift the side section up and off of the centre section.
11. Grab the other side section by the side frame handle.
12. Lift the side section up and off of the centre section.

NOTE: Perform the disassembly steps in reverse order to assemble the power chair.

NOTE: During assembly, make sure the battery box latches are in the up (locked) position and the centre section latch is in the down (locked) position.

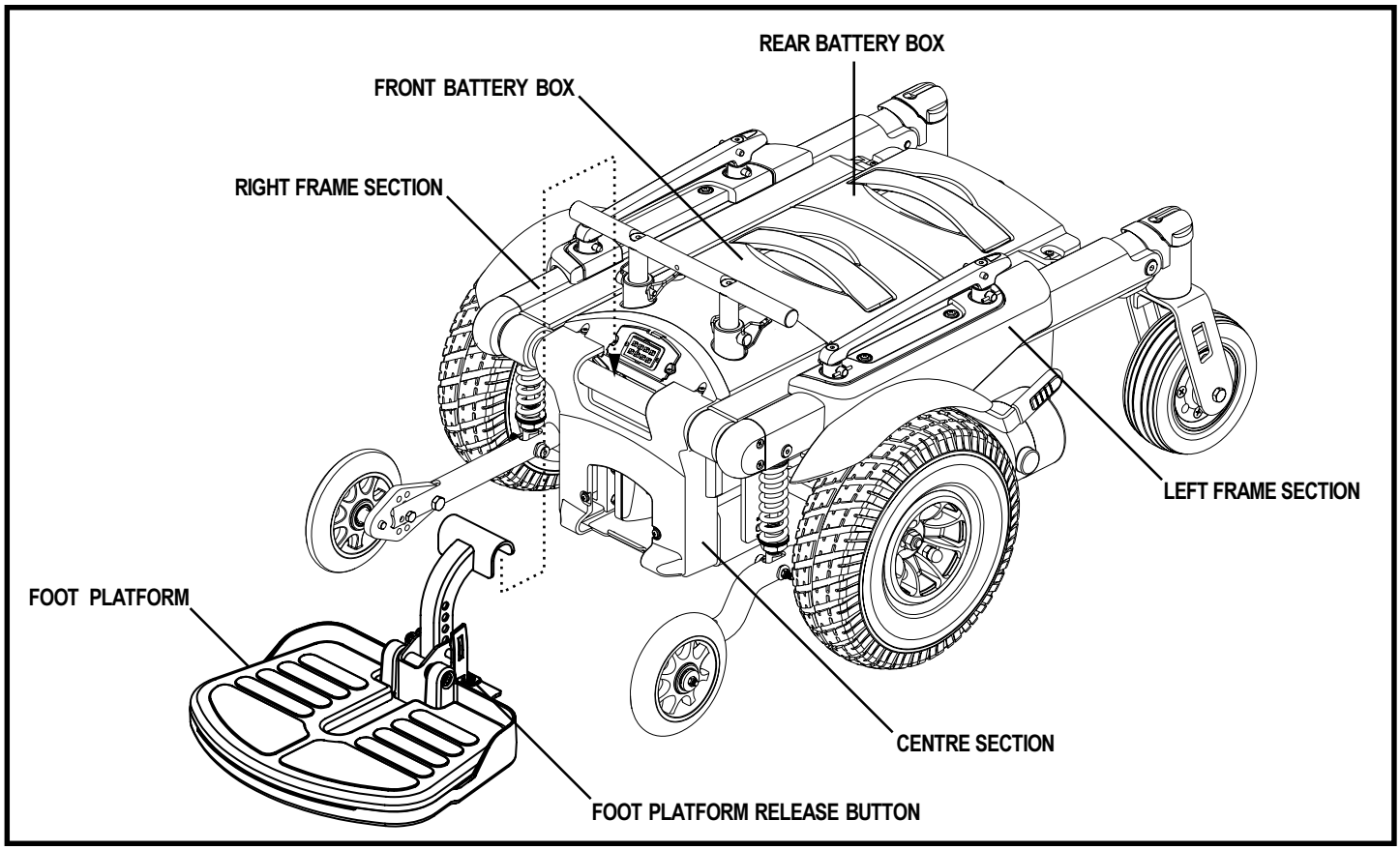

Figure 14. Quantum 1107 Power Base Parts

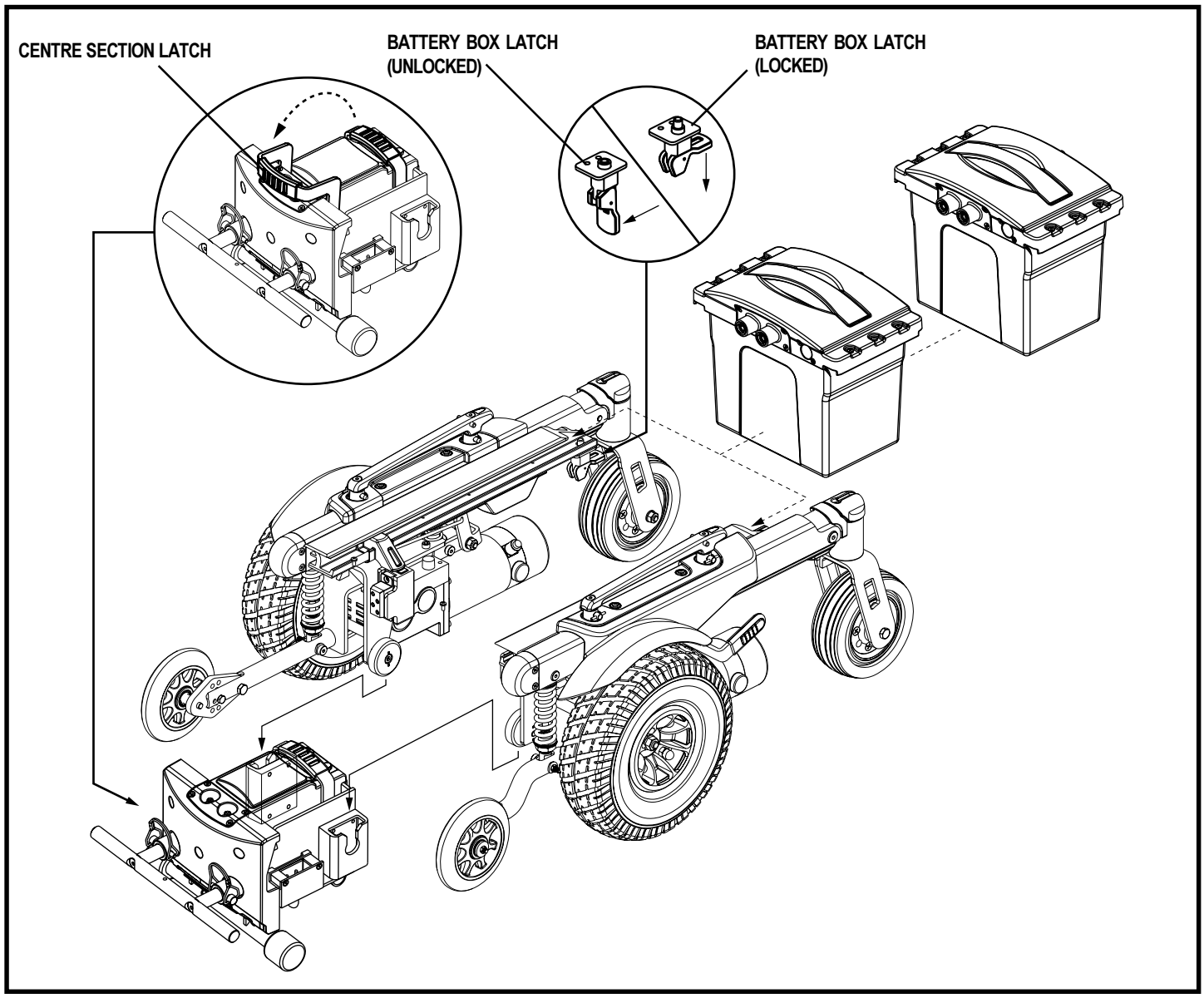

Figure 15. Quantum 1107 Battery Box Removal and Frame Separation

COMFORT ADJUSTMENTS

After becoming familiar with your power chair's operation, you may find the need to make some adjustments to increase your comfort. These adjustments include seat height and angle, armrest angle, foot platform height and angle, and controller position. If your power chair is equipped with an optional seating system, refer to the information provided in separate manuals. If your power chair is equipped with a medium-back seat, refer to the following information.

WARNING! If your power chair was configured by your Quantum Rehab Specialist, please consult your healthcare professional before changing the seat position or making any other adjustment. Some adjustments may degrade your power chair's performance and safety by changing its centre of gravity.

WARNING! Some power chair components are heavy. You may need assistance to lift or carry them. Please refer to the specifications table for specific component weights before you disassemble the power chair.

WARNING! Prevent injury. Remove the occupant from the power chair before making any adjustments/repairs.

You may need the following to make comfort adjustments:

- metric/standard socket set and ratchet
- adjustable spanner
- thread lock

Seat Height and Seat Angle Adjustment

You can change the seat height to one of two positions in 2.5 cm increments by raising the front seat interface and side frame handles. See figures 16 and 17. If you raise or lower either the front seat interface or the side frame handles, you can also change the seat base angle (dump).

To change the seat height:

1. Turn off the power to the controller.
2. Disconnect the controller from the power base. See figure 6.
3. Remove the seat from the power base.
4. Loosen the screws that attach the side frame handles and front seat interface to the seat posts. See figures 16 and 17.
5. Remove the retaining clips that secure the seat posts to the power base.
6. Move the seat posts up or down to the desired height.

NOTE: Change the seat dump by raising or lowering only one set of posts (front or rear).

7. Reinstall the retaining clips.
8. Remove each screw from the side frame handles and front seat interface and apply thread lock.
9. Reinstall each screw and tighten.

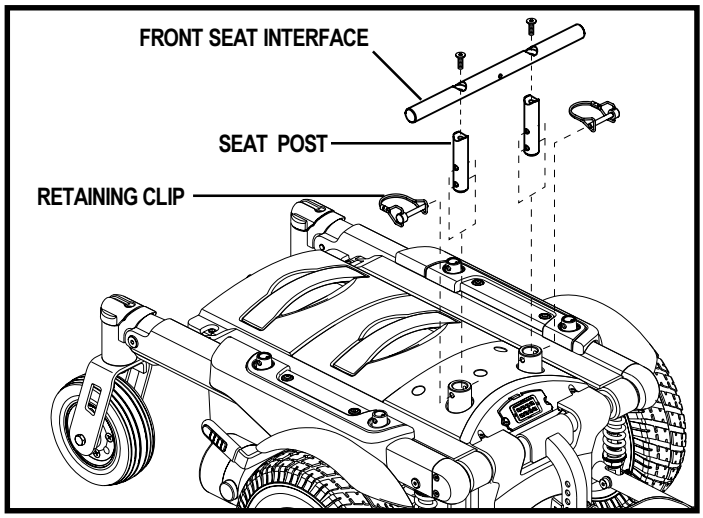

Figure 16. Front Seat Interface Height Adjustment

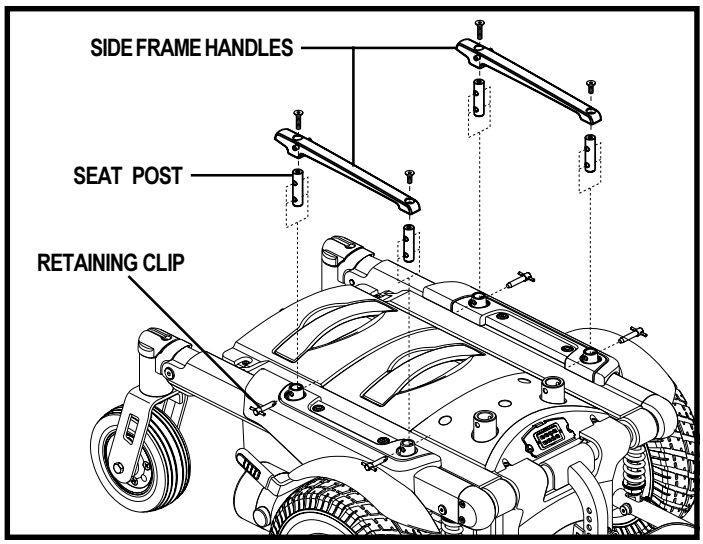

Figure 17. Side Frame Handles Height Adjustment

10. Reinstall the seat.
11. Reconnect the controller to the power base.

Seat Position

You can move the seat forward or rearward by changing the extrusion mounting position.

To change the position:

1. Turn off the power to the controller.
2. Unplug the controller from the power base.
3. Remove the seat from the power base.
4. Remove both extrusions from the bottom of the seat. See figure 18.
5. Reposition the extrusions on a different set of mounting holes. You must move both extrusions the same number of holes either forward or rearward. See figure 18.
6. Fasten the extrusions back onto the bottom of the seat.
7. Reinstall the seat.
8. Plug the controller into the power base.

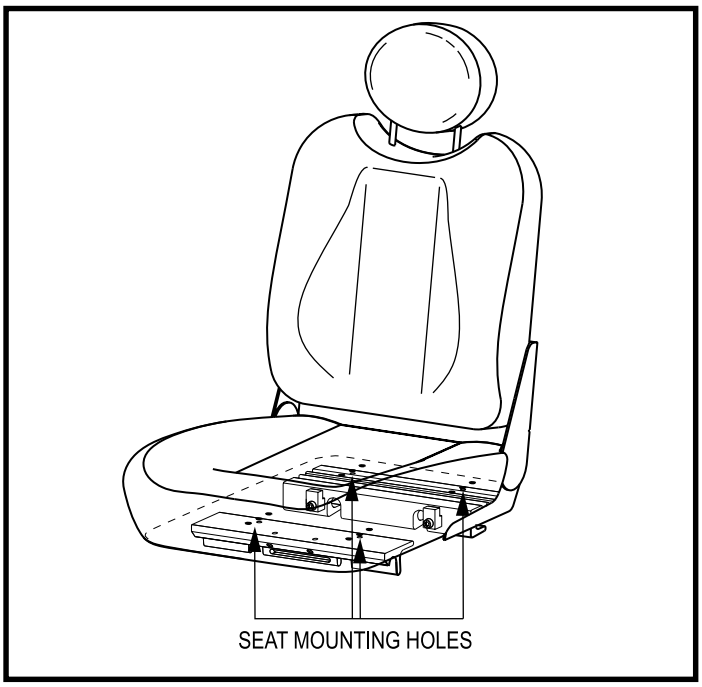

Figure 18. Seat Mounting Holes

Seatback Angle Adjustment

If your power chair is equipped with an adjustable seatback, you can adjust it to four (4) different angles: 90°, 102°, 105° or 107°.

To adjust the seatback angle:

1. Remove the seatback angle adjusting screw from each seat hinge. See figure 19.
2. Set the seatback at the desired angle.
3. Reinstall the seatback angle adjusting screw to each seat hinge and tighten.

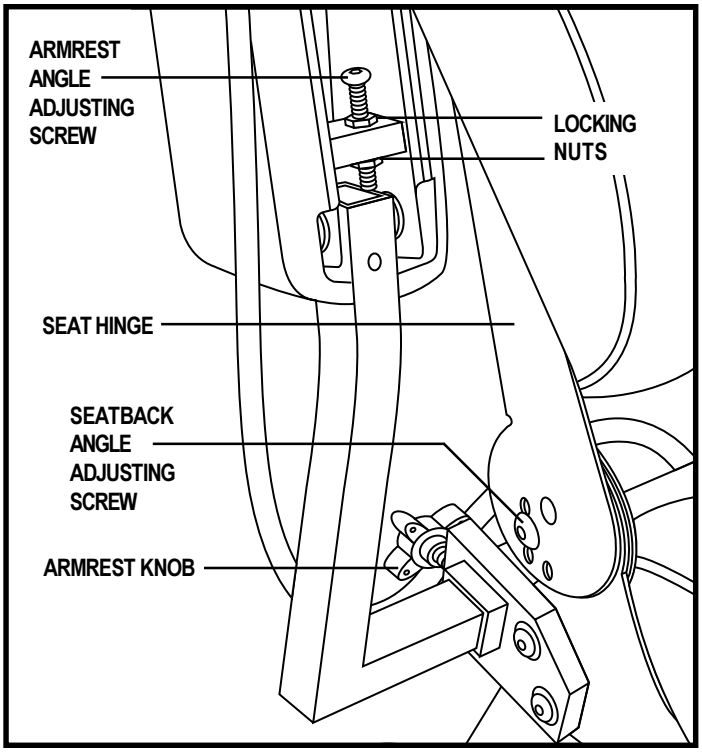

Figure 19. Seatback Angle Adjustment

Armrest Width Adjustment

You can change each armrest's width independently of the other.

NOTE: Changing the armrest width may increase the overall width of your power chair.

To change the armrest width:

1. Locate the armrest knob on each side of the armrest receiver bracket. See figure 19.
2. Loosen each knob.
3. Slide the armrests in or out to the desired width.
4. Tighten each knob.

Armrest Angle Adjustment

To change the armrest angle:

1. Lift the armrest straight up so that it is perpendicular to the floor. See figure 19.
2. Loosen the locking nuts.
3. Turn the armrest angle adjusting screw clockwise to lower the front of the armrest or anticlockwise to raise the front of the armrest.
4. Tighten the locking nuts to lock the armrest angle adjusting screw into place.

Foot Platform Height

The foot platform height is easily adjusted to different heights in 1.27 cm increments.

To raise or lower the foot platform:

1. Remove the quick release fasteners from the foot platform bracket. See figure 20.
2. Raise or lower the foot platform to the desired height.
3. Reinstall the quick release fasteners into the foot platform bracket and tighten.

Foot Platform Depth

To adjust the foot platform depth:

1. Remove the quick release fasteners from the foot platform bracket. See figure 20.
2. Move the foot platform in or out to the desired depth.
3. Reinstall the quick release fasteners into the foot platform bracket and tighten.

Quick Release Fasteners

The foot platform is attached to the power base with two quick release fasteners. See figure 20. Each quick release fastener consists of a bolt, a lever, and a nut. See figure 21. The lever has a cam on the end that allows it to clamp into place. The quick release fastener has two states: clamped and unclamped. When the lever is open, the quick release fastener is unclamped. When the lever is closed, the quick release fastener is clamped.

To clamp the quick release fastener:

1. Make sure the lever is in the open position.
2. Turn the nut clockwise until it is snug.
3. Rotate the lever until it is in the fully closed position.

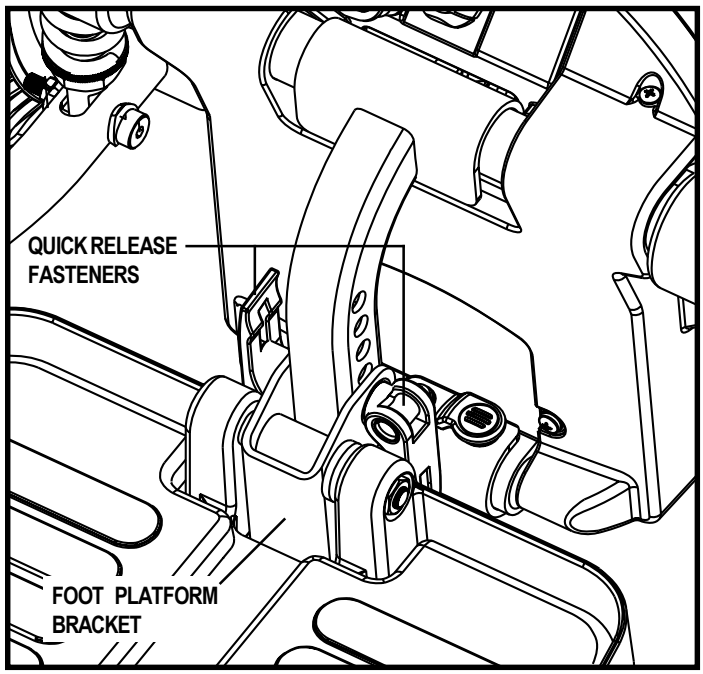

Figure 20. Foot Platform Adjustment

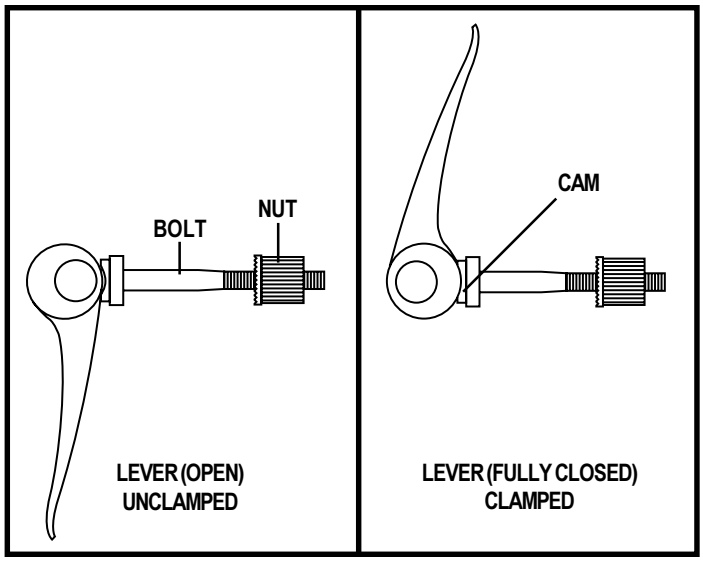

Figure 21. Quick Release Fasteners

NOTE: If the lever will not rotate to the fully closed position, then turn the nut anticlockwise one-quarter or one-half turn.

Foot Platform Angle

You can adjust the angle of the foot platform with a hex key. See figure 22.

To adjust the foot platform angle:

1. Flip up the foot platform and locate the setscrew.
2. Turn the setscrew anticlockwise to raise the front of the foot platform.
3. Turn the setscrew clockwise to lower the front of the foot platform.

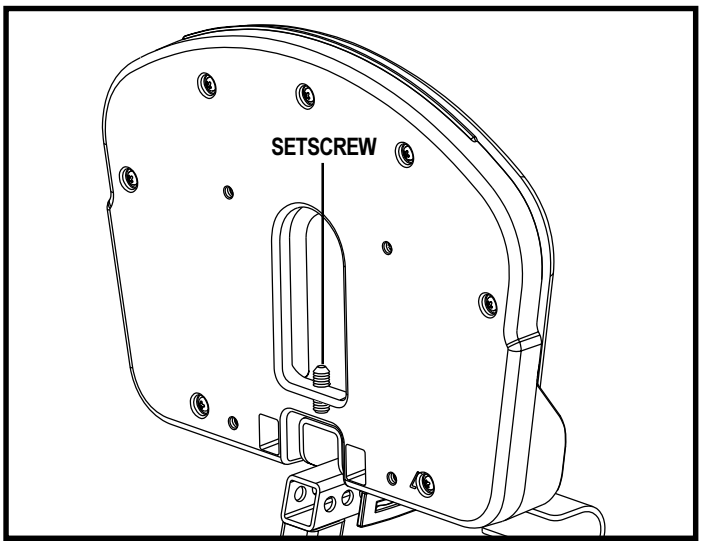

Figure 22. Underside of Foot Platform

Controller Position

You can position the controller for either left-hand or right-hand use.

WARNING! Do not place the controller cable so that it can be pinched in the seat frame or the power base frame.

To change the controller position:

1. Turn off power to the controller.
2. Disconnect the controller from the power base.
3. Cut the wire tie(s) that attaches the controller cable to the armrest.
4. Flip up the armrest and loosen the setscrew. See figure 23.
5. Slide the controller out of the armrest.
6. Loosen the setscrew in the other armrest.
7. Place the controller in the other armrest.
8. Tighten the setscrew to secure the controller.
9. Use a wire tie to secure the controller cable to the armrest.
10. Plug the controller into the power base. See figure 6.

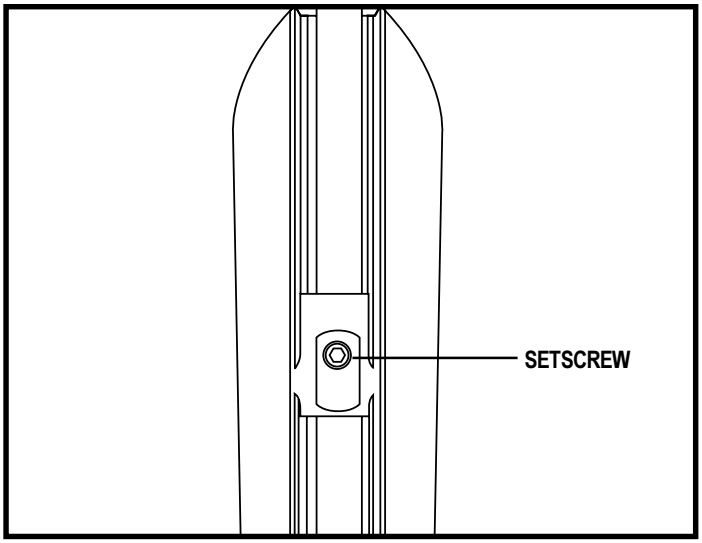

Figure 23. Underside of Armrest

Swing-away Footrests

Swing-away Footrests (SFRs) enable you to rotate the footrests to the side before you transfer onto or off of your power chair.

To rotate the SFRs:

1. Push in the release lever. See figure 24.
2. Rotate the SFRs.

To adjust the SFR length:

1. Remove the two adjustment screws from the side of each footrest extension. See figure 24.
2. Slide the footrest up or down to the desired length.
3. Reinstall the two adjustment screws.

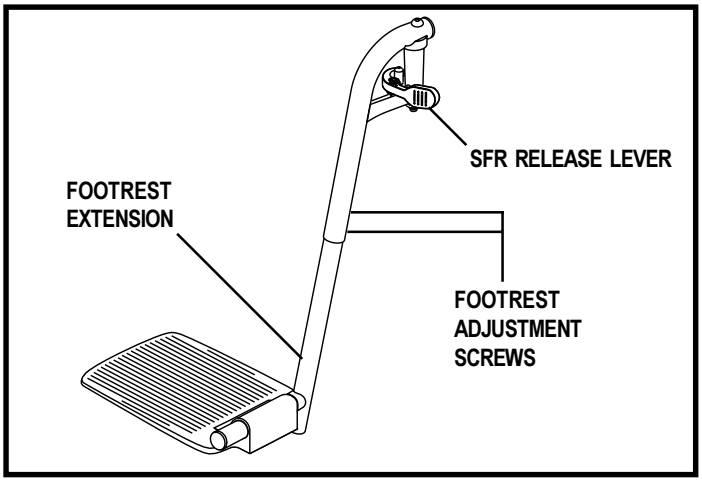

Figure 24. Swing-Away Footrests

Elevating Leg Rests (Optional)

Elevating Leg Rests (ELRs) offer an infinite range of adjustment for the leg angle and a footrest adjustment range of 30.5-48 cm.

To rotate the ELRs:

1. Push in release lever A. See figure 25.
2. Rotate the ELRs.

To adjust the ELR length:

1. Remove the two adjustment screws from the side of each leg rest extension. See figure 25.
2. Slide the leg rest up or down to the desired length.
3. Reinstall the two adjustment screws.

To adjust the ELR angle:

1. Push down release lever B. See figure 25.
2. Move the leg rest to the desired angle.

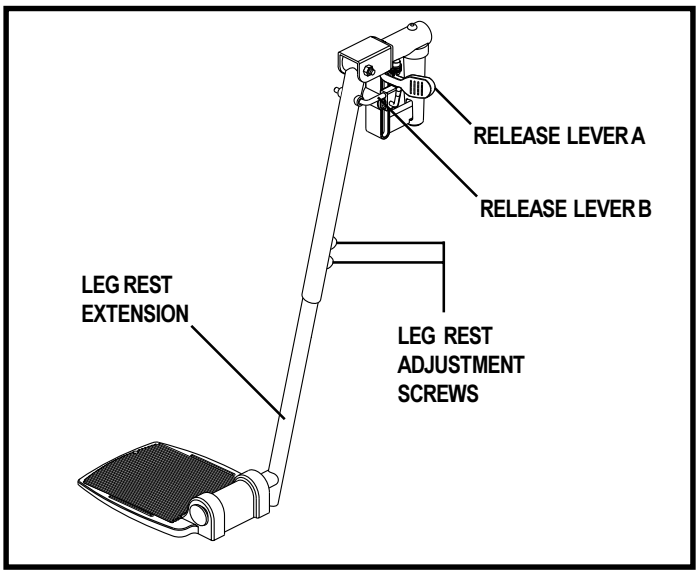

Figure 25. Elevating Leg Rests

Anti-Tip Wheels

The anti-tip wheels are designed to give your power chair increased stability on rough surfaces. The anti-tip wheels are preset at the factory for smooth surfaces or indoor use only. If you plan on using your power chair on rough surfaces, it may be necessary to adjust the anti-tip wheels to better suit your needs. The anti-tip wheels may need adjustment if the following occurs:

- When coming to a stop, your power chair tips forward excessively.
- The anti-tip wheels constantly rub the ground.

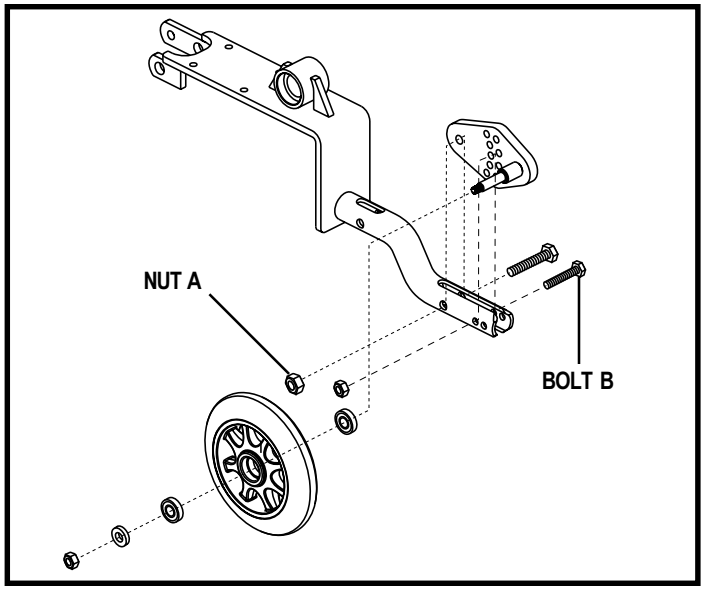

Figure 26. Anti-Tip Wheel Assembly

WARNING! Consult your Quantum Rehab Specialist before attempting to change the anti-tip wheel height! Changing the anti-tip wheel height affects handling under acceleration!

WARNING! The higher you raise the anti-tip wheels, the more you increase your power chair's tendency to tilt forward while decelerating. You can compensate for this by having your Quantum Rehab Specialist make a small adjustment to the pre-programmed deceleration setting in the controller or by moving the seat assembly farther to the back of your power chair.

PROHIBITED! Do not remove the anti-tip wheels.

NOTE: Each drive tyre must be inflated to 2.4 bar (35 psi) if equipped with pneumatic tyres. The user must also be seated in the power chair in order to properly adjust the anti-tip wheels.

To adjust the anti-tip wheels:

1. Loosen nut A. See figure 26.
2. Remove bolt B.
3. Raise or lower the anti-tip wheel. Each hole is spaced 1.27 cm apart.
4. Reinstall bolt B.
5. Tighten nut A.
6. Raise or lower the other anti-tip wheel so that it is at the same height.

Multi-Axis Foot Plate

The multi-axis foot plate assembly can be installed on either a swing-away footrest or an elevating leg rest. The multi-axis foot plate has four adjustments: leg rest length (A), position (B), tilt (C) and angle (D). See figure 27.

To change leg rest length (A):

1. Remove the hardware.
2. Move the leg rest to the desired position.
3. Reinstall the hardware.

To change foot plate position (B):

1. Remove the hardware.
2. Move the foot plate to the desired position.
3. Reinstall the hardware.

To change foot plate tilt (C):

1. Loosen the hardware.
2. Tilt the foot plate to desired position.
3. Tighten the hardware.

To change foot plate angle (D):

1. Turn the setscrew clockwise to decrease the angle.
2. Turn the setscrew anticlockwise to increase the angle.

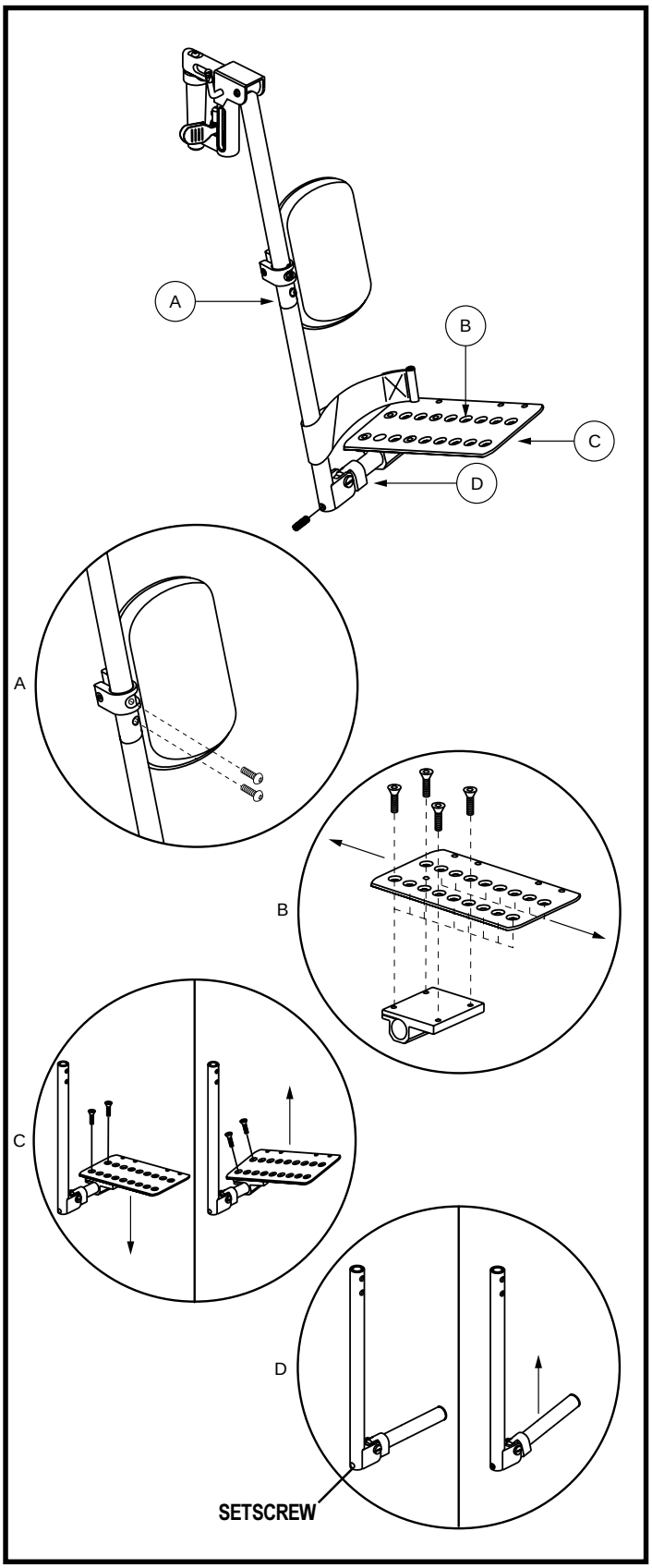

Figure 27. Multi-Axis Foot Plate (ELR Shown)

Positioning Belt

Your power chair may be equipped with an auto-type positioning belt that can be adjusted for operator comfort. See figure 28. The positioning belt is designed to help support the operator so that he/she does not slide down or forward in the seat. The positioning belt is not designed for use as a restraining device.

To install the positioning belt:

1. Remove the rearmost screw that holds the seat hinge to the seat base on both the left and right seat hinges.
2. Insert the screw through the supplied washer, through the positioning belt, and into the seat base for each side of the power chair seat.
3. Tighten both screws.

To adjust the positioning belt for operator comfort:

1. Once seated, insert the metal tab on one side of the belt into the plastic housing on the opposite side until you hear a click. See figure 28.
2. Pull the excess strap attached to the metal tab until it is secure, but not so tight as to cause discomfort.

Figure 28. Positioning Belt Adjustment

BATTERIES AND CHARGING

Your power chair uses two long-lasting, 12-volt, deep-cycle batteries. These batteries are sealed and maintenance free. Since they are sealed, there is no need to check the electrolyte (fluid) level. Deep-cycle batteries are designed to handle a longer and deeper discharge. Though they are similar in appearance to automotive batteries, they are not interchangeable. Automotive batteries are not designed to handle a long, deep discharge, and also are unsafe for use in power chairs.

WARNING! Battery posts, terminals, and related accessories contain lead and lead compounds. Wash hands after handling.

Charging the Batteries

The battery charger is essential in providing long life for your power chair batteries. It is designed to optimise your power chair's performance by charging the batteries safely, quickly, and easily.

WARNING! You must recharge your power chair's batteries with the supplied charger. Do not use an automotive-type battery charger.

PROHIBITED! Removal of grounding prong can create electrical hazard. If necessary, properly install an approved 3-pronged adapter to an electrical outlet having 2-pronged plug access. Failure to heed could result in personal injury and/or property damage.

PROHIBITED! Never use an extension lead to plug in your battery charger. Plug the charger directly into a properly wired standard wall outlet.

To charge the batteries using the off-board charger:

1. Position your power chair next to a standard wall outlet.
2. Be certain the controller power is turned off and the power chair is in drive mode.
3. Plug the off-board charger into the off-board charger/programming socket on the controller. See VII. "Operation."
4. Plug the off-board charger into the wall outlet.

NOTE: If it is a Pride off-board charger, then there are two lights in it. The red light indicates that power to the off-board charger is on. The green light indicates that the batteries are fully charged. If it is not a Pride off-board charger, then follow the instructions supplied by the manufacturer.

5. When the batteries are fully charged, unplug the off-board charger from the wall outlet and then from the controller.

NOTE: You can remove both battery boxes from the power base and charge them using the off-board charger port located on the front battery box. The battery boxes must be connected in order to charge them. See figure 29.

WARNING! When charging through the battery boxes, never use greater than a 5-amp charging system. Failure to comply may result in damage to your power chair.

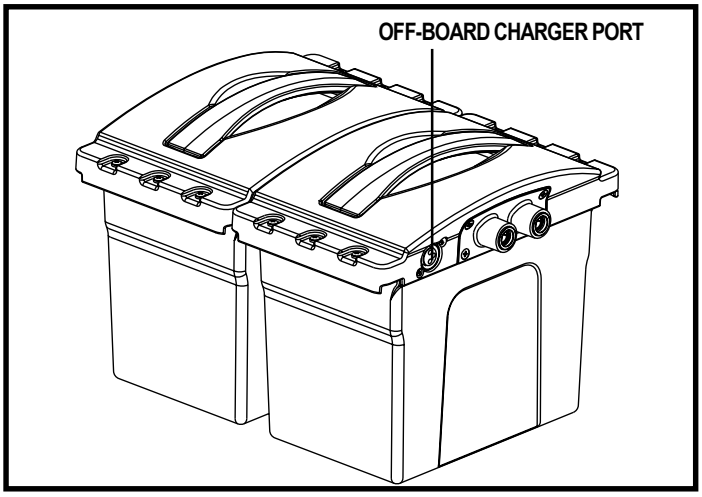

Figure 29. Battery Boxes (Removed from Power Base)

Battery Break-in

To break in new batteries for maximum efficiency:

1. Fully recharge any new battery prior to its initial use. This brings the battery up to about 90% of its peak performance level.
2. Operate your power chair throughout the house and grounds. Move slowly at first and do not travel too far until you become accustomed to the controls and break in the batteries.
3. Give the batteries another full charge of 8 to 14 hours and operate your power chair again. The batteries will now perform at over 90% of their potential.
4. After four or five charging cycles, the batteries will top off at 100% charge and last for an extended period.

Frequently Asked Questions (FAQs)

How does the charger work?

The battery charger takes the standard wall outlet voltage (alternating current) and converts it to 24 VDC (direct current). The power chair batteries use direct current to run your power chair. When the battery voltage is low, the charger works harder to charge the battery. As the battery voltage approaches full charge, the charger does not work as hard to complete the charging cycle. When the battery is fully charged, the amperage from the charger is nearly at zero. This is how the charger maintains a charge but does not overcharge the battery.

Can I use a different battery charger?

You should use the charger supplied with the power chair. It is the safest, most efficient tool to charge the batteries. We do not recommend using other types of chargers (e.g., an automotive battery charger).

NOTE: Your power chair's charger will not operate after the batteries have been discharged to nearly zero voltage. If this happens, call your Quantum Rehab Specialist for assistance.

How often must I charge the batteries?

Many factors come into play when deciding how often to charge the batteries. You may use your power chair all day on a daily basis or you may not use it for weeks at a time.

- **Daily Use**
  If you use your power chair on a daily basis, charge the batteries as soon as you are finished using your power chair. Your power chair will be ready each morning to give you a full day's service. It is recommended that you charge the batteries 8 to 14 hours after daily use.

- **Infrequent Use**
  If you use your power chair infrequently (once a week or less), you should charge the batteries at least once per week for 12 to 14 hours.

NOTE: Keep your batteries fully charged and avoid deeply discharging your batteries. Do not charge the batteries for more than 24 hours at a charging cycle.

VI. BATTERIES AND CHARGING

How can I get maximum range or distance per charge?
Rarely do you have an ideal driving situation such as smooth, flat, hard terrain with no wind, hills, or curves. More often you are presented with hills, pavement cracks, uneven and loosely packed surfaces, curves, and wind. All of these factors will affect the distance or running time per battery charge. Below are a few suggestions for obtaining the maximum range per charge:

- Always charge the batteries fully prior to your trip.
- Plan your trip in advance to avoid inclines if possible.
- Limit baggage weight to essential items.
- Try to maintain an even speed and avoid stop-and-go driving.

What type of batteries should I use?
We recommend deep-cycle batteries that are sealed and maintenance free. Both AGM and Gel-Cell are deep-cycle batteries that are similar in performance. Refer to the specifications table for more battery information.

WARNING! Corrosive chemicals contained in batteries. Use only AGM or Gel-Cell batteries to reduce the risk of leakage or explosive conditions.

Why do my new batteries seem weak?
Deep-cycle batteries employ a much different chemical technology than that used in car batteries, nickel-cadmium (nicads) or in other common battery types. Deep-cycle batteries are specifically designed to provide power, drain down their charge and then accept a relatively quick recharge. AGM and Gel-Cell batteries should be charged as often as possible. They do not have a "memory" like nickel-cadmium batteries.

We work closely with our battery manufacturer to provide a battery that best suits your power chair's specific demands. During shipping, batteries encounter temperature extremes that may influence initial performance. Heat robs the charge from the battery and cold slows the power available and extends the time needed to recharge the battery (just as with a car battery).

It might take a few days for the temperature of the battery to stabilise and adjust to its new ambient temperature. More importantly, it will take a few "charging cycles" (a partial drain— then a full recharge) to establish the critical chemical balance that is essential to the battery's peak performance and long life. It will be well worth it to take the time to break in your batteries properly.

How can I ensure maximum battery life?
A fully charged deep-cycle battery will provide reliable performance and extended battery life. Keep your power chair's batteries fully charged whenever possible. Batteries that are regularly and deeply discharged, infrequently charged, or stored without a full charge may be permanently damaged, causing unreliable power chair operation and limited battery life.

How should I store my power chair and its batteries?
If you do not use your power chair regularly, we recommend maintaining battery vitality by charging the batteries at least once per week.

If you do not plan on using your power chair for an extended period, fully charge the batteries prior to storage. Disconnect the battery harnesses and store the power chair in a warm, dry environment. Avoid temperature extremes, such as freezing and excessively hot conditions and never attempt to charge a frozen battery. A cold or frozen battery should be warmed for several days prior to recharging.

What about public transportation?
AGM and Gel-Cell batteries are designed for application in power chairs and other mobility vehicles, allowing safe transportation on aircraft, buses, and trains, as there is no danger of spillage or leakage. We suggest you contact the carrier's ticket counter in advance to determine that carrier's specific requirements.

What about shipping?
If you wish to use a freight company to ship your power chair to your final destination, repack your power chair in the original shipping container and ship the batteries in separate boxes.

VSI ELECTRONIC CONTROLLER

The electronic controller is what you use to operate your power chair. The electronic controller enables you to move the power chair, as well as monitor battery charge, electronic controller functions, and the condition of your electrical system. The VSI electronic controller is an integral electronic controller. All of the electronics necessary to operate the power chair are contained in one module. See figure 30. Typically, the VSI is mounted to one of the armrests and is connected to the motors and batteries at the power base.

The controller supplied with your power chair has been pre-programmed to meet your needs. The program is set using either a personal computer with software provided by the controller manufacturer or with a hand-held programmer, also provided by the controller manufacturer.

WARNING! The controller program can affect speed, acceleration, deceleration, and braking. But if it is programmed incorrectly or outside of the safe limits as determined by your healthcare professional, it can create a dangerous situation. Only the power chair manufacturer, an authorised representative of the manufacturer, or a trained service technician should program the controller.

The VSI consists of:

1. joystick
2. keypad
3. off-board charger/programming socket
4. actuator connector (optional)
5. controller connector

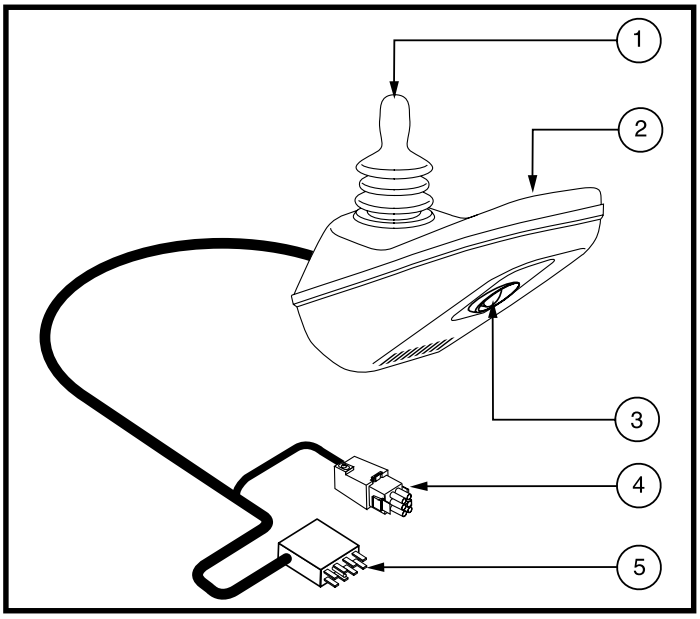

Figure 30. VSI Controller

Joystick

The joystick controls the direction and speed of your power chair. When you move the joystick from the neutral (centre) position, the electromagnetic brakes release and allow your power chair to move. The farther you push the joystick from its neutral position, the faster your power chair moves. When you release the joystick and allow it to return to the neutral position, you engage the electromagnetic brakes. This causes your power chair to decelerate and come to a complete stop.

WARNING! If your power chair begins to move in an unexpected manner, immediately release the joystick. Unless the joystick is damaged, this action should stop your power chair.

Keypad

The keypad is located in front of the joystick. It contains keys necessary to operate your power chair. See figure 31.

On/Off Key

The on/off key turns the VSI on and off.

WARNING! Unless faced with an emergency situation, do not use the on/off key to stop the power chair. This will cause the power chair to stop abruptly.

WARNING! Always turn the power off when you are stationary to prevent unexpected movement.

Battery Condition Meter

The battery condition meter is a 10-segment illuminated display located in front of the joystick. It consists of red, yellow and green lights. When the lights are on, it indicates that there is power to the VSI. The lights also indicate battery status, VSI operational status and electrical system status.

- **Red, yellow, and green lights lit:** Batteries charged; VSI operational and electrical system OK.
- **Red and yellow lights lit:** Charge batteries if possible; VSI operational and electrical system OK.
- **Red lights only lit or slow flash:** Charge batteries as soon as possible; VSI operational and electrical system OK.

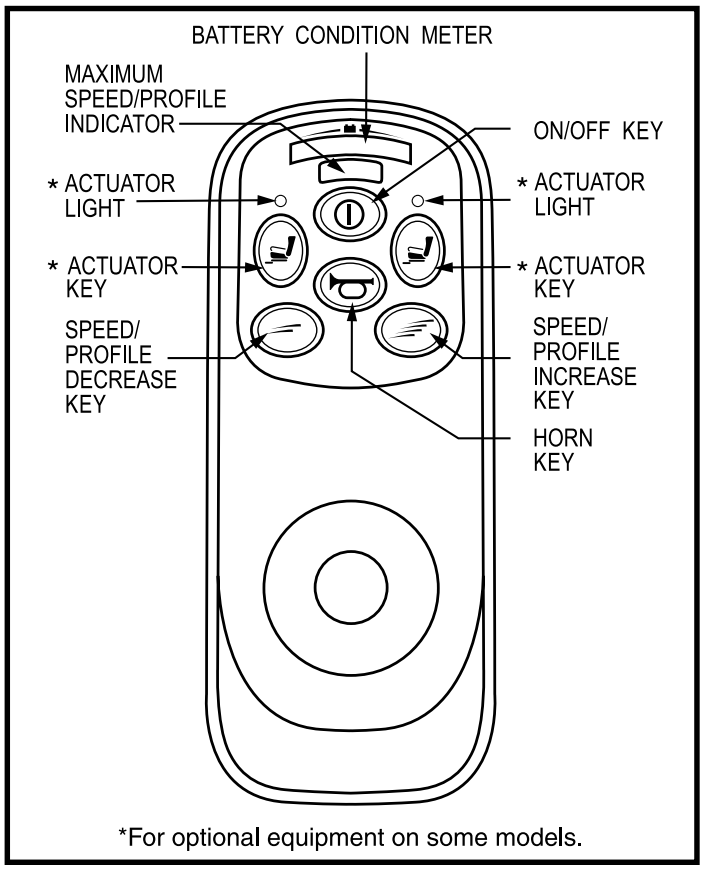

Figure 31. VSI Controller Keypad

NOTE: When the batteries approach a discharged state, the first red light will begin to slowly flash, reminding you the batteries need to be charged immediately!

- **Rapid flash of lights:** Indicates a fault in the VSI or the electrical system. Refer to "VSI Error Codes."
- **Ripple side to side of lights:** The joystick was not in the neutral position when the controller was turned on. If you get "ripple side to side of lights," turn off the controller, allow the joystick to return to the neutral position, then turn on the controller.

NOTE: If you still get "ripple side to side of lights," contact your Quantum Rehab Specialist.

Speed/Profile Keys

The speed/profile keys control either the speed setting or the drive profile. Press the speed/profile increase key to increase the speed setting or change the drive profile to a higher number. Press the speed/profile decrease key to decrease the speed setting or change the drive profile to a lower number. The speed setting or drive profile is displayed on the maximum speed/profile indicator. If your power chair was programmed with a drive profile, contact your Quantum Rehab Specialist for more information.

NOTE: We recommend that the first few times you operate your power chair, you use the lowest speed setting until you become familiar with your new power chair.

Actuator Keys and Actuator Lights (For Optional Equipment)

Actuator keys and actuator lights are used for optional equipment such as power elevating leg rests. For specific operation of the actuator keys and actuator lights, contact your Quantum Rehab Specialist.

Horn Key

The horn key activates the horn.

Locking/Unlocking the VSI

The VSI has a feature that enables you to lock your power chair to prevent unauthorised use.

To lock the VSI:

1. With the VSI switched on, press and hold the on/off key. After 1 second, the VSI should beep.
2. Release the on/off key.
3. Push the joystick to the full forward position until the VSI beeps.
4. Pull the joystick to the full rearward position until the VSI beeps.
5. Release the joystick. There should be a long beep.
6. The VSI is now locked.

To unlock the VSI:

1. Press the on/off key and power on the VSI. The maximum speed/profile indicator should ripple side to side.
2. Push the joystick to the full forward position until the VSI beeps.
3. Pull the joystick to the full rearward position until the VSI beeps.
4. Release the joystick. There should be a long beep.
5. The VSI is now unlocked.

NOTE: If the above procedure fails to either lock or unlock the VSI, contact your Quantum Rehab Specialist.

Off-board Charger/Programming Socket

The off-board charger/programming socket is located on the front of the VSI. If you use an off-board charger, the charger current should not exceed 8 amps. Contact your Quantum Rehab Specialist for more information.

WARNING! Only chargers with Neutrik NC3MX plugs should be connected to the off-board charger/ programming socket. See your Quantum Rehab Specialist for more information.

Actuator Connector (Optional)

The actuator connector connects the VSI to optional powered systems such as elevating leg rests.

Controller Connector

The controller connector connects the VSI to the power chair's batteries, motors, and motor brakes.

WARNING! Failure to properly align the connectors can result in damage to the VSI, the charger, and the connectors.

Thermal Rollback

The VSI controller is equipped with a thermal rollback circuit. This circuit monitors the temperature of the controller, which roughly translates to motor temperature. In the event that the VSI controller becomes excessively hot (above 60° C/140° F), motor current (amperage) is reduced. For every degree above 60° C/140° F, the motor current limit is reduced by .55 amps until the VSI controller reaches 70° C/158° F, at which time the current output is reduced to zero. This reduces your power chair's "power," which could also reduce your power chair's speed and allows the electrical components and motors to cool down. When the temperature returns to a safe level, your power chair resumes its normal operation.

VSI Error Codes

The VSI controller is designed with the user's safety as the prime consideration. It incorporates many sophisticated self-test features which search for potential problems at a rate of 100 times per second. If the VSI detects a problem either in its own circuits or in the power chair's electrical system, it may stop the power chair, depending on the severity of the problem. The VSI is designed to maximise the user's safety under all normal conditions. The table below identifies the individual error codes. Error codes are displayed as a rapid flashing of the battery condition meter lights. If you get one of these error codes, contact your Quantum Rehab Specialist.

FLASHING LIGHTS	DIAGNOSIS AND SOLUTION
1	The batteries need charging or there is a bad connection to the batteries. Check the connections to the batteries. If the connections are good, try charging the batteries.
2	The left motor has a bad connection. Check the left motor connection.
3	The left motor has a short circuit to a battery connection. Contact your Quantum Rehab Specialist.
4	The right motor has a bad connection. Check the right motor connection.
5	The right motor has a short circuit to a battery connection. Contact your Quantum Rehab Specialist.
6	The power chair is being inhibited by the battery charger. Unplug the battery charger.
7	A joystick fault is indicated. Make sure that the joystick is in the neutral (centre) position before turning on the controller.
8	A controller system fault is indicated. Make sure that all connections are secure.
9	The parking brakes have a bad connection. Check the parking brake and motor connections. Make sure the controller connections are secure.
10	An excessive voltage has been applied to the controller. This is usually caused by a poor battery connection. Check the battery connections.

REMOTE PLUS CONTROLLER

The electronic controller is what you use to operate your power chair. The electronic controller enables you to move the power chair, as well as monitor battery charge, electronic controller functions, and the condition of your electrical system. The Remote Plus is part of a modular electronic controller system. The system consists of more than one module. Typically, the Remote Plus is mounted to one of the armrests. See figure 32. It is connected to a power module located on the power base through the controller communications cable. The Remote Plus may be used to control some optional systems, such as power elevating seats or lights through an actuator/lighting module (ALM) located on the power base.

The controller supplied with your power chair has been pre-programmed to meet your needs. The program is set using either a personal computer with software provided by the controller manufacturer or with a hand-held programmer, also provided by the controller manufacturer.

WARNING! The controller program can affect speed, acceleration, deceleration, and braking. If it is programmed incorrectly or outside of the safe limits as determined by your healthcare professional, it can create a dangerous situation. Only the power chair manufacturer, an authorised representative of the manufacturer, or a trained service technician should program the controller.

The Remote Plus consists of the following:

1. joystick
2. keypad
3. controller communications cable
4. off-board charger/programming socket

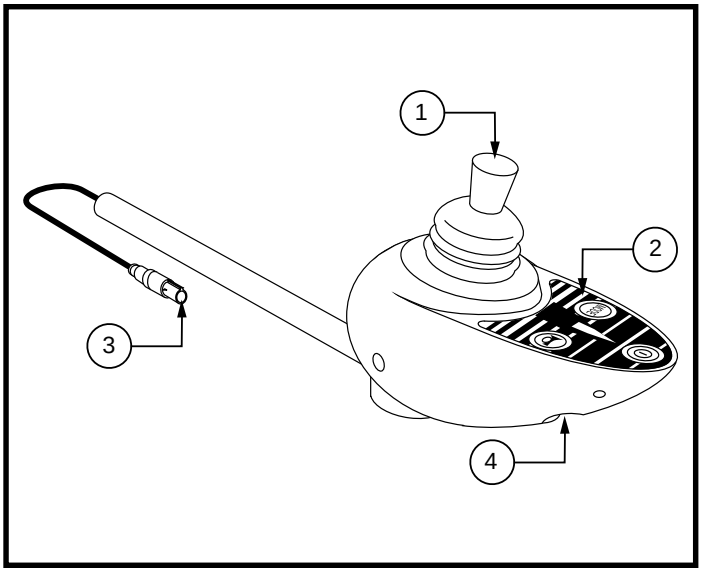

Figure 32. Remote Plus Controller

Joystick

The joystick controls the direction and speed of your power chair. When you move the joystick from the neutral (centre) position, the electromagnetic brakes release and allow your power chair to move. The farther you push the joystick from its neutral position, the faster your power chair moves. When you release the joystick and allow it to return to the neutral position, you engage the electromagnetic brakes. This causes your power chair to decelerate and come to a complete stop.

WARNING! If your power chair begins to move in an unexpected manner, immediately release the joystick. Unless the joystick is damaged, this action should stop your power chair.

Keypad

The keypad is located directly in front of the joystick. It contains keys that you will use to control your power chair. See figure 33.

On/Off Key

The on/off key turns the system on and off.

WARNING! Unless faced with an emergency situation, do not use the on/off key to stop the chair. This will cause the power chair to stop abruptly.

WARNING! Always turn the power off when you are stationary to prevent unexpected movement.

Mode Key (Speed Settings)

The mode key controls the speed settings. The Remote Plus speed settings range from 1 to 5. Typically, the slowest speed setting is 1 and the fastest speed setting is 5. The settings are indicated by the number of lights that are lit on the speed setting indicator.

NOTE: The speed settings are preset at the factory. If your Quantum Rehab Specialist changes the order of these settings, please make note of these changes. Contact your Quantum Rehab Specialist for more information.

To select a speed setting:

1. Press the on/off key to power on the controller.
2. Press the mode key once.
3. To increase chair speed, push the joystick to the right. Each time you push the joystick, you will increase the speed setting in the speed setting indicator.
4. To decrease chair speed, push the joystick to the left. Each time you push the joystick, you decrease the speed setting in the speed setting indicator.
5. Once you select the desired speed setting, press the mode key once to keep the setting or push the joystick in the forward or reverse direction. The chair will resume operation at the selected speed.

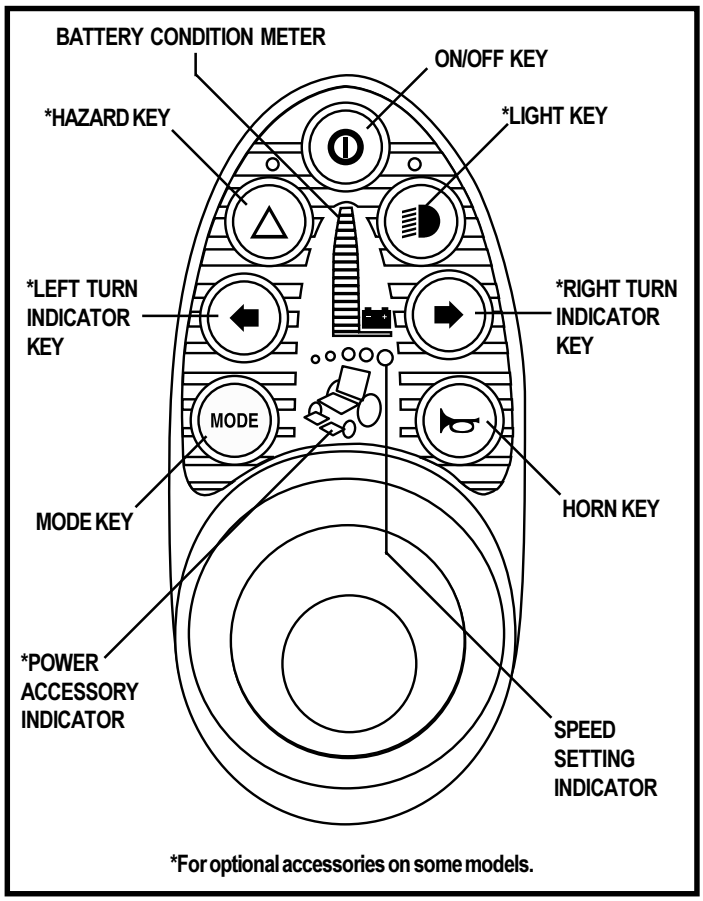

Figure 33. Remote Plus Keypad

NOTE: We recommend that the first few times you operate your power chair, you have your speed on the slowest setting until you become familiar with your new power chair.

Horn Key

The horn key activates the horn.

Battery Condition Meter

The battery condition meter is a 10-segment illuminated display located in front of the joystick. When the lights are on, it indicates that there is power to the Remote Plus. The lights also indicate battery status, Remote Plus operational status, and electrical system status.

- **Red, yellow, and green lights lit:** Batteries charged; controller and electrical system OK.
- **Red and yellow lights lit:** Charge batteries if possible; controller and electrical system OK.
- **Red lights only lit or slow flash:** Charge batteries as soon as possible; controller and electrical system OK.
- **Rapid flash of lights:** Indicates an error in the controller or the electrical system. See "Remote Plus Error Codes."
- **Ripple up and down of lights:** The joystick was not in the neutral position when the controller was turned on. If you get "ripple up and down of lights," turn off the controller and allow the joystick to return to the neutral position. Then turn on the controller.

NOTE: If you still get "ripple up and down of lights," contact your Quantum Rehab Specialist.

NOTE: When the batteries approach a discharged state, the first red light will begin to slowly flash, reminding you the batteries need to be charged immediately!

Right/Left Turn Indicator Keys (Optional)

The right/left turn indicator keys toggle either the left or right turn indicators. Press once to turn on and press again to turn off. You can also turn off the selected turn indicator by pressing the opposite indicator key or the hazard key.

Light Key (Optional)

The light key turns the headlights/taillights on and off independent of other indicators.

Hazard Key (Optional)

The hazard key activates both turn indicators at the same time. You can only cancel this by pressing the hazard key again.

Power Accessories/Power Accessory Indicator (Optional)

If your power chair is equipped with power accessories such as a power seat or power elevating leg rests, you can operate them through the keypad. The power accessory indicator indicates the selected power accessory. Contact your Quantum Rehab Specialist for more information.

Off-board Charger/Programming Socket

The off-board charger/programming socket is located on the front of the Remote Plus. If you use an off-board charger, the charger current should not exceed 8 amps. Contact your Quantum Rehab Specialist for more information.

WARNING! Only chargers with Neutrik NC3MX plugs should be connected to the off-board charger/ programming socket. See your Quantum Rehab Specialist for more information.

Controller Communications Cable

The controller communications cable provides the Remote Plus with a connection to the power module.

Sleep Mode

Your Remote Plus controller has a sleep mode feature. Sleep mode is a built-in circuit that automatically shuts off the main power if the joystick is not moved in any direction for approximately five minutes. The battery condition meter lights on the keypad indicate sleep mode by blinking once every five seconds. To restore power and continue, push the on/off key twice.

Thermal Rollback

The Remote Plus is equipped with a thermal rollback circuit. This circuit monitors the temperature of the motors, power module, and remote. In the event that any of them become excessively hot (above 122° F), motor voltage is reduced. For every degree above 122° F, the voltage is reduced by 5 volts. This reduces your power chair's speed and allows the electrical components to cool down. When the temperature returns to a safe level, your power chair resumes its normal speed.

Remote Plus Error Codes

In addition to indicating the current state of battery charge, the battery condition meter can also indicate possible problems with your power chair's electrical system. If any of the battery condition meter lights are flashing rapidly, the controller may be indicating an error. Error codes are displayed as a number of flashing lights. For instance, if the first light is flashing rapidly, the battery voltage is nearly depleted. The table below identifies the individual error codes, probable causes, and possible solutions. If you get one of these error codes, contact your Quantum Rehab Specialist.

FLASHING LIGHTS	DIAGNOSIS	SOLUTION
10	High Battery Voltage	Check batteries.
9	Solenoid Brake Fault	Check motor/brake wiring.
8	Possible Controller Fault	See Quantum Rehab Specialist.
7	Possible Joystick Fault	See Quantum Rehab Specialist.
6	Inhibit Active	Unplug charger. Check connections.
5	Right Motor Wiring Fault	Check right motor wiring.
4	Right Motor Disconnected	Check right motor wiring.
3	Left Motor Wiring Fault	Check left motor wiring.
2	Left Motor Disconnected	Check left motor wiring.
1	Low Battery Voltage	Check batteries/battery wiring.

FLIGHT CONTROLLER

The electronic controller is what you use to operate your power chair. It takes the battery voltage and sends it to the appropriate system. The electronic controller enables you to move the power chair, as well as monitor battery charge, electronic controller functions, and the condition of your electrical system. The FLIGHT is part of a modular electronic controller system. The system consists of more than one module. Typically, the FLIGHT is mounted to one of the armrests. See figure 34. It is connected to a power module located on the power base through the controller communications cable. The FLIGHT may be used to control some optional systems, such as lights.

The controller supplied with your power chair has been pre-programmed to meet your needs. The program is set using either a personal computer with software provided by the controller manufacturer or with a hand-held programmer, also provided by the controller manufacturer.

WARNING! The controller program can affect speed, acceleration, deceleration, and braking. But if it is programmed incorrectly or outside of the safe limits as determined by your healthcare professional, it can create a dangerous situation. Only the power chair manufacturer, an authorized representative of the manufacturer, or a trained service technician should program the controller.

The FLIGHT consists of:

1. joystick
2. keypad
3. off-board charger/programming socket
4. controller connector
5. controller power module

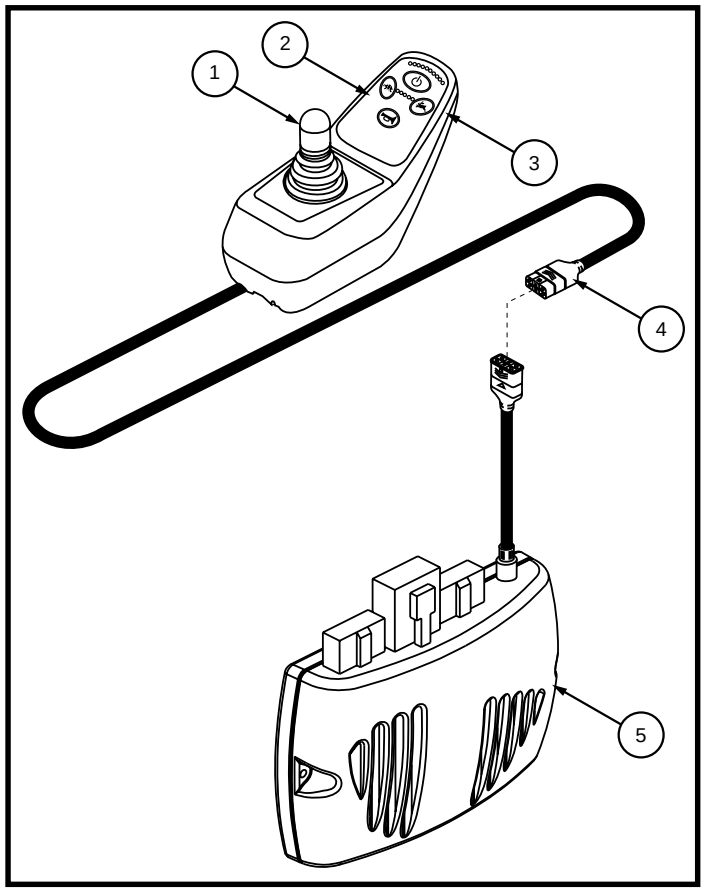

Figure 34. FLIGHT Controller

Joystick

The joystick controls the direction and speed of your power chair. When you move the joystick from the neutral (centre) position, the electromagnetic brakes release and allow your power chair to move. The farther you push the joystick from its neutral position, the faster your power chair moves. When you release the joystick and allow it to return to the neutral position, you engage the electromagnetic brakes. This causes your power chair to decelerate and come to a complete stop.

WARNING! If your power chair begins to move in an unexpected manner, immediately release the joystick. Unless the joystick is damaged, this action should stop your power chair.

Keypad

The keypad is located in front of the joystick. It contains keys necessary to operate your power chair. See figure 35.

On/Off Key

The on/off key turns the FLIGHT on and off.

WARNING! Unless faced with an emergency situation, do not use the on/off key to stop the chair. This will cause the power chair to stop abruptly.

WARNING! Always turn the power off when you are stationary to prevent unexpected movement.

Battery Condition Meter

The battery condition meter consists of ten lights arranged in an arc over the on/off key. As the battery voltage drops, the number of lights reduces from right to left. When the battery capacity drops to 10% or below, the left red LED will flash.

- **Left Red LED Flashing:** Battery charge is low; Charge the batteries as soon as possible.
- **Right-to-Left Ripple of LEDs:** FLIGHT is in lock mode; Unlock the FLIGHT.
- **Left-to-Right Ripple of LEDs Alternating with Steady Display:** FLIGHT is in programming, inhibit, or charging mode.
- **Right Green LED Flashing:** FLIGHT is in speed limit mode.
- **All LEDs Flashing Slowly:** The joystick was not in the neutral position when the controller was turned on. If you get "all LEDs flashing slowly," turn off the controller, allow the joystick to return to the neutral position, then turn on the controller.
- **All LEDs Flashing Quickly:** The FLIGHT has detected a fault; Refer to the Error Code table.

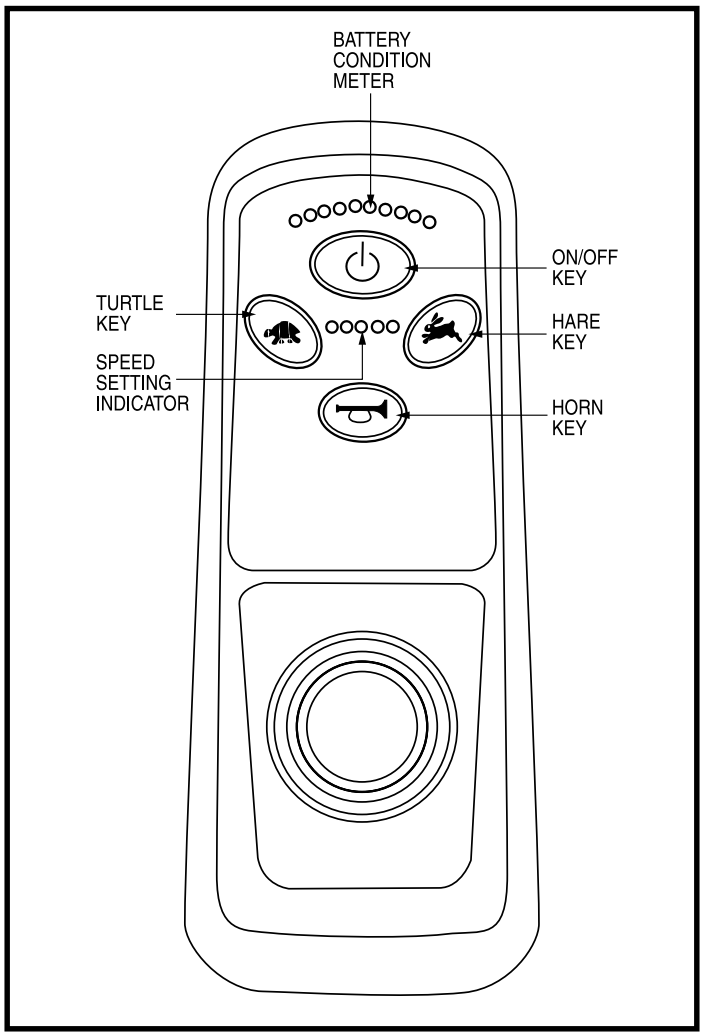

Figure 35. FLIGHT Controller Keypad

Lock Mode

The FLIGHT controller is equipped with a feature that enables you to "lockout" unauthorized users.

To lock the FLIGHT controller:

1. While the power is on, press and hold the on/off key for 2 seconds. The display will turn off immediately. After 2 seconds, all LEDs will flash briefly and the horn will sound a short beep.
2. The FLIGHT controller is now locked.

To unlock the FLIGHT controller:

1. While the FLIGHT is locked, press the on/off key to turn on the FLIGHT. All LEDs will flash briefly. The LEDs will then slowly ripple from right to left.
2. Press the Horn Key twice before the LED ripple has completed, approximately 10 seconds. The FLIGHT is now unlocked.

Horn Key

The horn key activates the horn.

Speed Keys

There are two keys that control the speed. Press the hare key to increase the speed. Press the tortoise key to decrease the speed. The speed setting is displayed on the speed indicator. If your power chair was programmed with a drive profile, contact your Quantum Rehab Specialist for more information.

NOTE: We recommend that the first few times you operate your power chair, you set the speed to the slowest setting until you become familiar with your new power chair.

Off-board Charger/Programming Socket

You may use an off-board charger to charge the power chair batteries through the 3-pin socket located on the front of the FLIGHT. If you use an off-board charger, the charger current should not exceed 8 amps. Contact your Quantum Rehab Specialist for more information.

WARNING! Only chargers with Neutrik NC3MX plugs should be connected to the off-board charger/ programming socket. See your Quantum Rehab Specialist for more information.

NOTE: The socket may also be used for reprogramming the FLIGHT. Contact your Quantum Rehab Specialist for more information.

Sleep Mode (If Enabled)

The power chair controller features a sleep mode. Sleep mode is a built-in circuit that will automatically shut off the main power if the joystick is not moved in any direction for a period of time. This time factor is programmed into the controller. To restore power and continue, push any key on the keypad.

Error Codes

The battery condition meter will flash error codes when the FLIGHT controller detects an abnormal condition is the electrical system. All of the battery condition meter LEDs will flash a number of times quickly, then pause, then flash again. The battery condition meter will continue to flash the error codes until the problem is fixed. The table below identifies the individual error codes. If any of these error codes persist, contact your Quantum Rehab Specialist.

Error Code	Probable Cause	Possible Solution
1	Possible stall timeout or user error	Release the joystick.
2	Battery Fault	Check the batteries and cables. Try to charge the batteries. The batteries may need to be replaced.
3	Left Motor Fault	Check the left motor, connections, and cabling.
4	Right Motor Fault	Check the right motor, connections, and cabling.
5	Left Park Brake Fault	Check the left park brake, connections, and cabling.
6	Right Park Brake Fault	Check the right park brake, connections, and cabling.
7	FLIGHT Controller Module Fault	Check the communications connections and wiring.
8	FLIGHT Power Module Fault	Check the communications connections and wiring.
9	FLIGHT Communications Fault	Check the communications connections and wiring.
10	Unknown Fault	Contact your Quantum Rehab Specialist.
11	Incompatible Controller Fault	Contact your Quantum Rehab Specialist.

CARE AND MAINTENANCE

Your power chair is a sophisticated device. Like any motorised vehicle, it requires routine maintenance checks. You can perform some of these checks, but others require assistance from your Quantum Rehab Specialist. Preventive maintenance is very important. If you follow the maintenance checks in this section as scheduled, you can help ensure that your power chair gives you years of trouble-free operation. If you have any doubt as to your power chair's care or operation, contact your Quantum Rehab Specialist.

WARNING! Prevent injury. Do not service the power chair when the seat is occupied.

Your power chair, like most electrical equipment, is susceptible to damage from the elements. Avoid damp areas of any kind.

WARNING! Direct exposure to water or dampness could cause the power chair to malfunction electronically and mechanically. Water can cause electrical components to corrode and the chair's frame to rust.

Should your power chair come in contact with water:

1. Dry your power chair as thoroughly as possible with a towel.
2. Allow your power chair to sit in a warm, dry place for 12 hours to allow unseen water to evaporate.
3. Check the joystick operation and the brakes before using your power chair again.
4. If any inconsistencies are found, take your power chair to your Quantum Rehab Specialist.

Temperature

- Some of the parts of your power chair are susceptible to extreme changes in temperature. Always keep your power chair between the temperatures of -8° C/18° F and 50° C/122° F.
- In extremely cold temperatures the batteries may freeze. The specific temperature at which they freeze depends on a number of factors, such as battery charge, usage, and composition of the batteries (e.g., AGM or Gel-Cell).
- Temperatures above 50° C/122° F may cause your power chair to operate at a reduced speed. This reduced speed is a safety feature built into the controller that helps prevent damage to the motor and other electrical components. See VII. "Operation."

General Guidelines

- Avoid knocking or bumping the controller, especially the joystick.
- Avoid prolonged exposure of your power chair to extreme conditions, such as heat, cold, or moisture.
- Keep the controller clean.
- Check all connectors to ensure that they are all tight and secured properly.
- Make sure the drive tyres are inflated to **2.4 bar (35 psi)** if equipped with pneumatic tyres.

WARNING! Overinflating tyres can cause them to explode and can result in personal injury.

WARNING! Do not use a high pressure hose to inflate your tyres.

- Use a rubber conditioner on the tyre sidewalls to help preserve them.

WARNING! Never use a rubber conditioner on the tread area of the tyres; doing so may make the tyres slippery and cause your power chair to skid.

- The body shroud has been sprayed with a clear sealant coating. You can apply a light coat of car wax to help it retain its high-gloss appearance.
- Check all electrical connections. Make sure they are tight and are not corroded.
- All wheel bearings are prelubricated and sealed. They require no subsequent lubrication.

Daily Checks

- With the controller turned off, check the joystick. Make sure it is not bent or damaged and that it returns to the neutral position when you release it. Check the rubber boot around the base of the joystick for damage. Visually inspect the boot. Do not handle or try to repair it. See your Quantum Rehab Specialist if there is a problem.
- Visually inspect the controller cable. Make sure that it is not frayed, cut, or has any wires exposed. See your Quantum Rehab Specialist if there is a problem.
- Check for flat spots on solid tyres. Flat spots could adversely affect stability.

Weekly Checks

- Disconnect and inspect the controller cable connector from the power base. Look for corrosion. Contact your Quantum Rehab Specialist if necessary.
- Ensure that all parts of the controller system are securely fastened to your power chair. Do not overtighten any screws.
- Check for proper tyre inflation. There should be **2.4 bar (35 psi)** in each tyre (if equipped with pneumatic tyres). If a tyre does not hold air, see your Quantum Rehab Specialist for replacement of the tube.
- Check the brakes. This test should be carried out on a level surface with at least 1 metre of clearance around your power chair.

To check the brakes:

1. Turn on the controller and turn down the speed level of your power chair.
2. After one second, check the battery condition meter. Make sure that it remains on.
3. Slowly push the joystick forward until you hear the electromagnetic brakes click. Immediately release the joystick. You must be able to hear each electromagnetic brake operating within a few seconds of joystick movement. Repeat this test three times, pushing the joystick rearward, then left, and then right.

Monthly Checks

- Check that the anti-tip wheels do not rub the ground when you operate the power chair. Adjust them as necessary. See V. "Comfort Adjustments."
- Check for extreme wear on the anti-tip wheels. Replace them as necessary.
- Check for drive tyre wear. See your Quantum Rehab Specialist for repair.
- Check the caster wheels for wear. Replace them as necessary.
- Check the caster forks for damage or fluttering which indicates that they may need to be adjusted or have the bearings replaced. See your Quantum Rehab Specialist for repair.
- Keep your power chair clean and free of foreign material, such as mud, dirt, hair, food, drink, etc.

Yearly Checks

Take your power chair to your Quantum Rehab Specialist for yearly maintenance. This helps ensure that your power chair is functioning properly and helps prevent future complications.

VIII. CARE AND MAINTENANCE

Storage

Your power chair should be stored in a dry place, free from temperature extremes. When storing, disconnect the batteries from the power chair. See VI. "Batteries and Charging."

WARNING! If you fail to store the unit properly, the frame can rust and the electronics can be damaged.

Cleaning Instructions

WARNING! Never hose off your power chair or place it in direct contact with water. Your power chair has a painted, ABS plastic body shroud that allows it to be easily wiped clean with a damp cloth.

WARNING! Never use any chemicals to clean a vinyl seat, as they may cause the seat to become slippery or dry out and crack. Use soapy water and dry the seat thoroughly.

Tyre/Wheel Replacement

If you have pneumatic tyres and you have a flat tyre, you can replace the tube. If your chair is equipped with a solid tyre insert, then you must replace the entire wheel assembly. Replacement tyres, tubes, and wheel assemblies are readily available through your Quantum Rehab Specialist.

WARNING! To avoid possible injury, be sure that the controller's power is turned off and the power chair is not in freewheel mode before performing this procedure.

WARNING! Completely deflate pneumatic tyres before attempting repair.

Follow these easy steps for a quick and safe repair for both pneumatic and solid tyres:

1. Turn off the power to the controller.
2. Set the power chair up on blocks.
3. If you are changing a pneumatic tyre, completely deflate it before removing the wheel.
4. Remove the drive wheel nut from the axle.
5. Pull the wheel off the axle.
6. Remove the hardware that fastens the two rim halves together. See figure 36.
7. Remove the old tube from the pneumatic tyre and replace it with a new tube or replace the entire assembly if it is a solid tyre.
8. Install the hardware that fastens the two rim halves together.
9. Slide the wheel back onto the shaft. Make sure that the key is in the axle slot.
10. Reinstall the drive wheel nut onto the axle and tighten.
11. Inflate the pneumatic tyres to **2.4 bar (35 psi)** if equipped with pneumatic tyres.
12. Remove the power chair from the blocks.

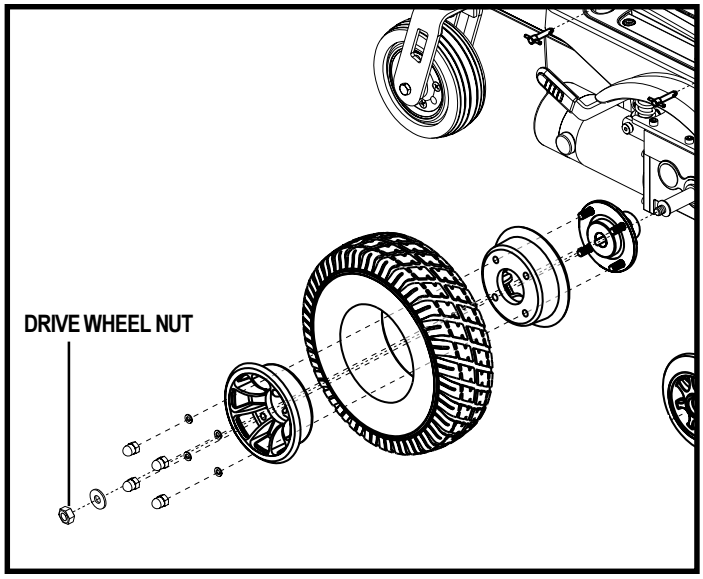

Figure 36. Quantum 1107 Drive Wheel

Battery Replacement

A battery wiring diagram is printed on a decal located inside the battery box lid. See VI. "Batteries and Charging" for correct battery specifications.

WARNING! Prevent injury. Do not replace battery when seat is occupied.

WARNING! Battery posts, terminals, and related accessories contain lead and lead compounds. Wear goggles and gloves when handling batteries and wash hands after handling.

WARNING! Power chair batteries are heavy. See specifications table. If you are unable to lift that much weight, be sure to get help. Lifting beyond your capacity can result in personal injury.

To replace the batteries:

1. Turn off the power to the controller.
2. Make sure that the power chair is in drive mode. See III. "Your Power Chair."
3. Remove the battery boxes. See IV. "Assembly/ Disassembly."
4. Disconnect the wiring harness from the batteries.
5. Remove the batteries from the battery boxes.
6. Place new batteries in the battery boxes. See figure 37.
7. Reconnect the battery harnesses according to the battery wiring diagram label. See figure 38.

WARNING! Prevent injury. Make sure you tighten the fasteners so that the connections are secure.

8. Reinstall the battery boxes onto the power base. Make sure that the battery box latches are in the up (locked) position.
9. Charge the batteries. See VI. "Batteries and Charging."

Battery Disposal and Recycling

If you encounter a damaged or cracked battery, immediately enclose it in a plastic bag and call your Quantum Rehab Specialist for instructions on disposal. Your Quantum Rehab Specialist will also have the necessary information on battery recycling, which is our recommended course of action.

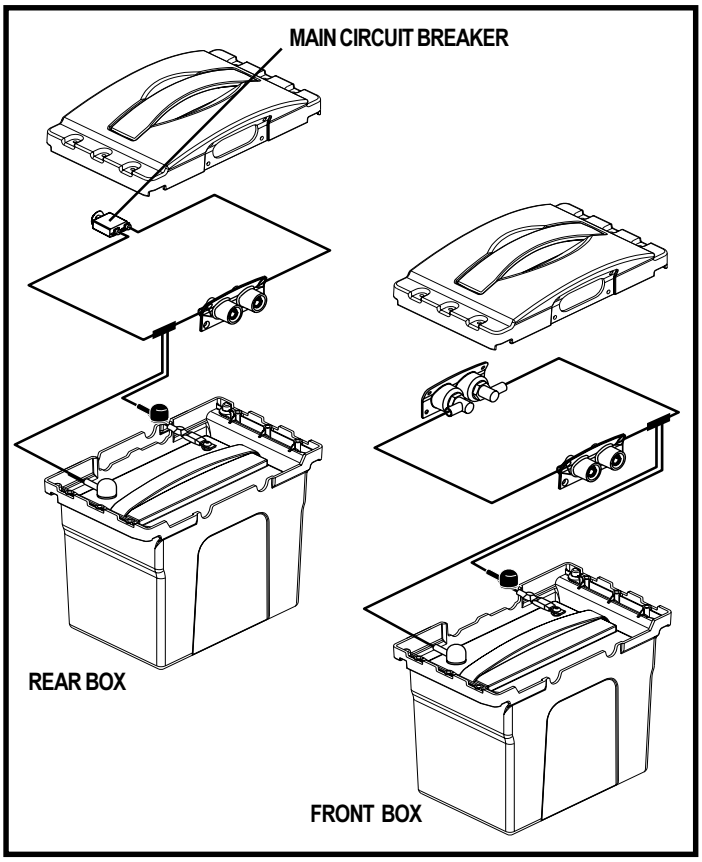

Figure 37. Battery Boxes

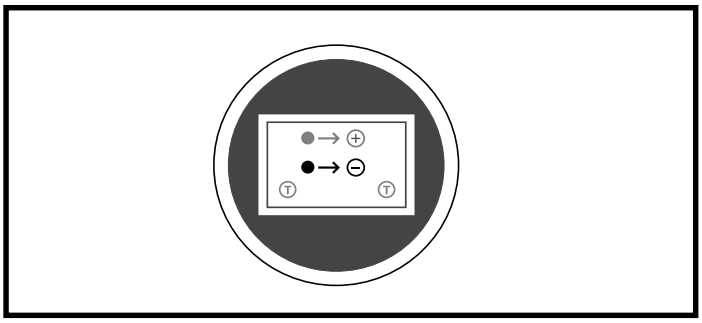

Figure 38. Battery Wiring Diagram Label

When to See Your Quantum Rehab Specialist for Service

The following symptoms could indicate a serious problem with your power chair. If necessary, contact your Quantum Rehab Specialist. When calling, have the model number, serial number, nature of the problem, and the error code if available.

- Motor noise
- Frayed harnesses
- Cracked or broken connectors
- Uneven wear on any of the tyres
- Jerky motion
- Pulling to one side
- Bent or broken wheel assemblies
- Does not power up
- Powers up, but does not move

Corrective Maintenance

If the battery condition meter does not light up when you turn on the power:

- Check the harness connections. Make sure they are tight.
- Check the circuit breaker. Reset it if necessary.
- Check the battery connections.

If the above conditions prove normal, you can load test the batteries with a battery load tester. These testers are available at automotive parts stores. Disconnect both batteries before load testing and follow the directions that come with the load tester. If either one of the batteries fails the load test, replace both of them. If your power chair still does not power up, contact your Quantum Rehab Specialist.

IX. WARRANTY

LIFETIME LIMITED WARRANTY
Structural frame components, including: platform, fork, seat post, and frame welds.

TWO-YEAR LIMITED WARRANTY
Drivetrain, including: differential, motor, and brake.

ONE-YEAR LIMITED WARRANTY
Your Quantum Power Chair is fully guaranteed for twelve (12) months from the date of purchase against faults arising due to defects in manufacture or materials. This warranty does not detract from, but is in addition to your legal rights.

All electronic parts, including controllers and battery chargers, have a one (1) year warranty. Servicing to the controller or battery charger must be carried out by your Quantum Rehab Specialist. Any attempt to open or dismantle these items renders the guarantee void on that item.

NOT COVERED UNDER WARRANTY
This guarantee does not extend to those items which may need replacement due to normal wear and tear (tyres, belts, bulbs, upholstery, plastic shrouds, motor brushes, fuses, and batteries), or damage to the product caused by misuse or accident for which Pride or its agent cannot be held responsible. This warranty does not include labour or service calls.

BATTERIES
Batteries are covered by a twelve (12) month warranty from the original manufacturer.

Gradual deterioration in performance due to being left in a discharged state, left in cold conditions for long periods of time, or worn out through heavy use is not covered.

SERVICE CHECKS AND WARRANTY SERVICE
Warranty service can be performed by your Quantum Rehab Specialist. Please contact your Quantum Rehab Specialist for advice on the current cost affecting the service visit.

REPLACEMENT UNITS
The availability of replacement units is subject to the discretion of the provider, not the manufacturer. For more information regarding replacement units, contact your Quantum Rehab Specialist.

QUANTUM® 1107

Quality Control - Quantum 1107

Model #_____

Serial #_____

Thank you for making the Quantum 1107 your choice in power chairs.

We have thoroughly inspected your Quantum 1107. The following check marks indicate that it has been tested, driven and inspected.

#1 In Quality

Pride keeps a more detailed report on file at the factory.

_____

Date Inspected

_____

Inspector

Pride
Mobility Products Australia Pty. Ltd.